PL 1.1 Узел PCM, модуль RIS, панель управления

Поз.	Номер	Название
1	–	ADF Assembly (REP 5.1)
2	802K53800	Top Cover Assembly (PR China) (REP 14.1) (Including 3-7)
–	802K62090	Top Cover Assembly (DMO) (REP 14.1) (Including 3-4, 6-7)
3	802E51840	Copy Exit Baffle
4	809E48410	Leaf Spring
5	802E95250	Status Code Label Kit (English)
–	892E54181	Status Code Label Kit (Chinese)
6	–	Top Cover
7	–	Magnet
8	090E02520	Platen Glass (REP 6.5)
9	101K48480	420 Control Console (Metric) (220V)
	101K49020	420 Control Console (Inch) (110V)
10	801K13160	RIS Assembly (REP 6.1)
11	–	PCM Assembly (Not Spare) (REP 1.9)

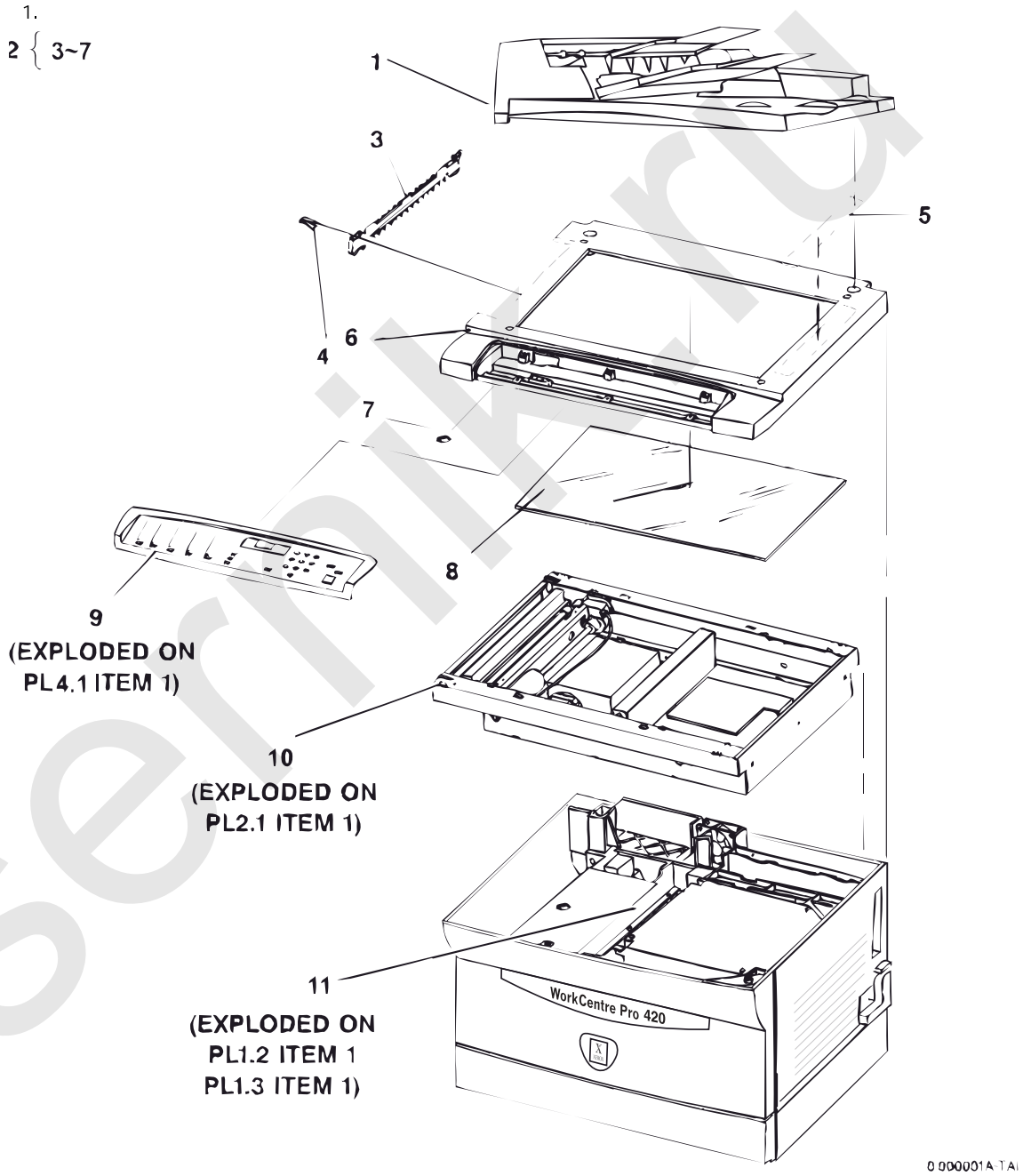

laserinfo.ru

PL 1.2 Верхние элементы PCM

Поз.	Название	Описание
1	–	Part of PCM Assembly (REF: PL 1.1 Item 9)
2	062K13011	ROS Module (REP 6.3)
3	160K96570	PCM Interface PWB (REP 1.3)
4	120E20080	Contact Spacer
5	604K17760	HVPS Repair Kit
6	055E49173	HVPS Mylar
7	105E15500	High Voltage Power Supply (HVPS) (PS2) (REP 1.5)
8	007K12173	Drive Module (MOT1) (REP 4.1)
9	960K10230	Main PWB (REP 1.2)
10	127K41250	Cooling Fan (MOT)
11	014K07852	Transfer Detack Contact Support (REP 1.6)
12	604K04040	CRU Blocker Kit
13	–	CRU Blocker (P/O PL 1.2 Item 12)
14	–	Spring (P/O PL 1.2 Item 12)
15	–	PCM Upper Frame (P/O PL 1.2 Item 1)
16	809E45010	RIS Ground Spring
17	117E23661	Power Cord (110v) (DMO)
–	117E10550	Power Cord (220v) (DMO)
–	117E23621	Power Cord (220v) (Europe/Iran/Africa/Turkey/Arabia/Russia)
–	117E23652	Power Cord (220v) (China)
–	117E23631	Power Cord (240v) (India/Hong Kong)
18	117E22910	Printer Cable

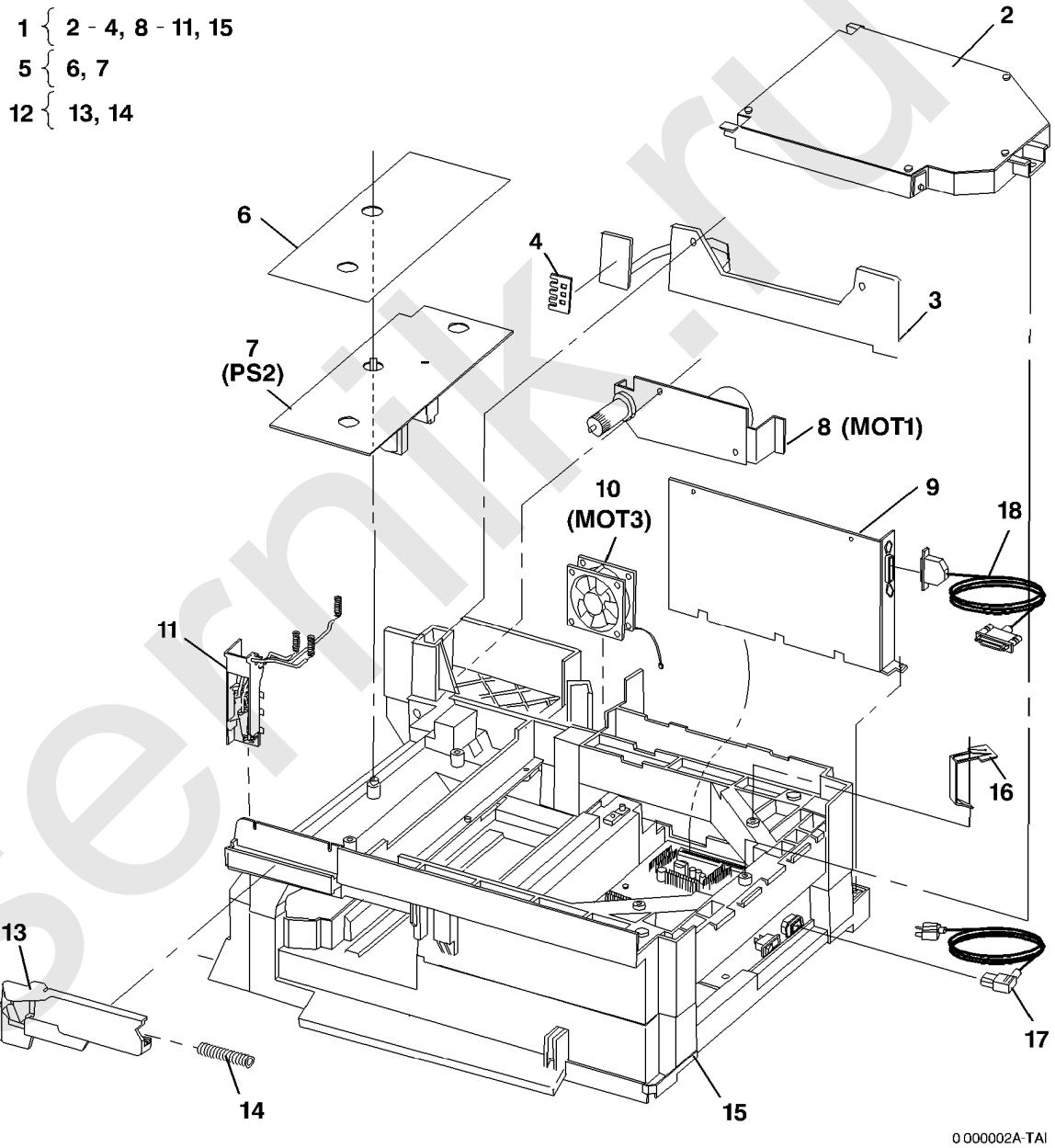

laserpik.ru

PL 1.3 Нижние элементы PCM

Поз.	Название	Описание
1	–	Part of PCM Assembly (REF: PL1.1 Item 9)
2	105E26600	LVPS (110V) (PS1) (REP 1.4)
–	105E15490	LVPS (220V) (PS1) (REP 1.4) (China Mainland)
	105E15680	LVPS (220V) (PS1) (REP 1.4) (DMO-WAST)
3	160K96140	Power Switch Board (220V)
	960K10030	Power Switch Board (110V)
4	–	DC Harness
5	962K16160	AC Harness (220V)
	962K20650	AC Harness (110V)
6	–	Conversion Socket
7	115K02072	Durm Cartridge Contact Support (REP 1.7)
8	604K17750	Toner Sensor Kit
9	130K66180	Toner Sensor (P/O PL 1.3 Item 4)
10	–	Toner Sensor Spring (P/O PL 1.3 Item 4)
11	122K02330	Wrase Lamp (LP1) (REP 1.8)
12	–	Crum Connector (Not Spared)
13	604K17860	Interlock Actuator Kit
14	–	Spring (P/O PL 1.3 Item 13)
15	–	Front Door Interlock Actuator Kit (P/O PL 1.3 Item 13)
16	–	PCM Lower Frame (P/O PL 1.3 Item 13)

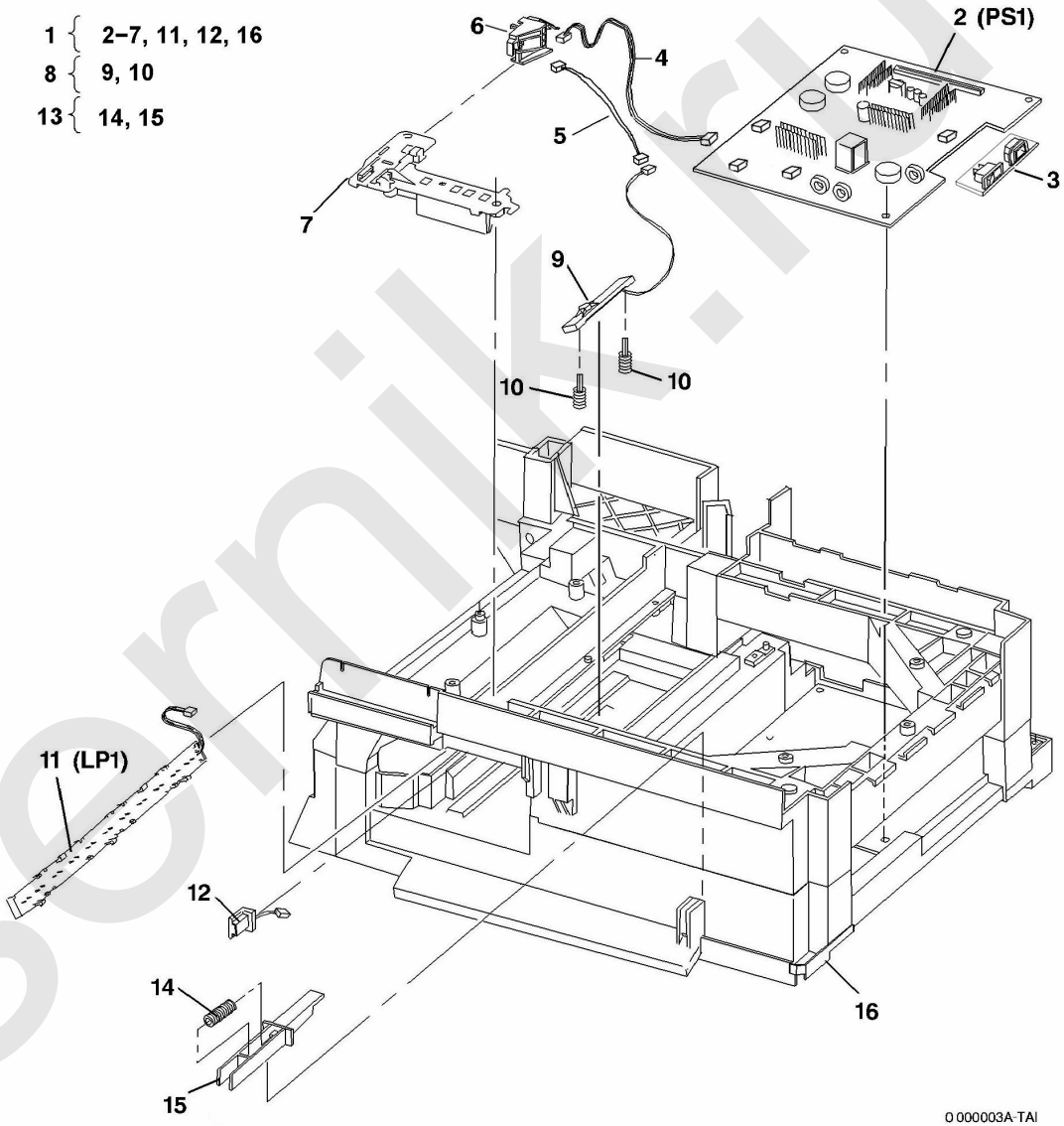

laserniki.ru

PL 1.4 Фьюзер, копи-картридж

Поз.	Номер	Название
1	126E02101	Heat Rod (110V) (REP 10.2)
–	126E02111	Heat Rod (220V) (REP 10.1)
2	126K22680	Fuser Module (110V) (REP 10.1)
–	126K00540	Fuser Module (220V) (REP 10.1)
3	106R00280	Toner Bottle
4	113R00022	Drum Cartridge (China Mainland) (REP 9.1)
–	113R00023	Drum Cartridge (DMO-East) (REP 9.1)
–	113R00024	Drum Cartridge (DMO-Wast) (REP 9.1)
–	113R00025	Drum Cartridge (HongKong/Korea) (REP 9.1)
–	113R00026	Drum Cartridge (DMO-India) (REP 9.1)

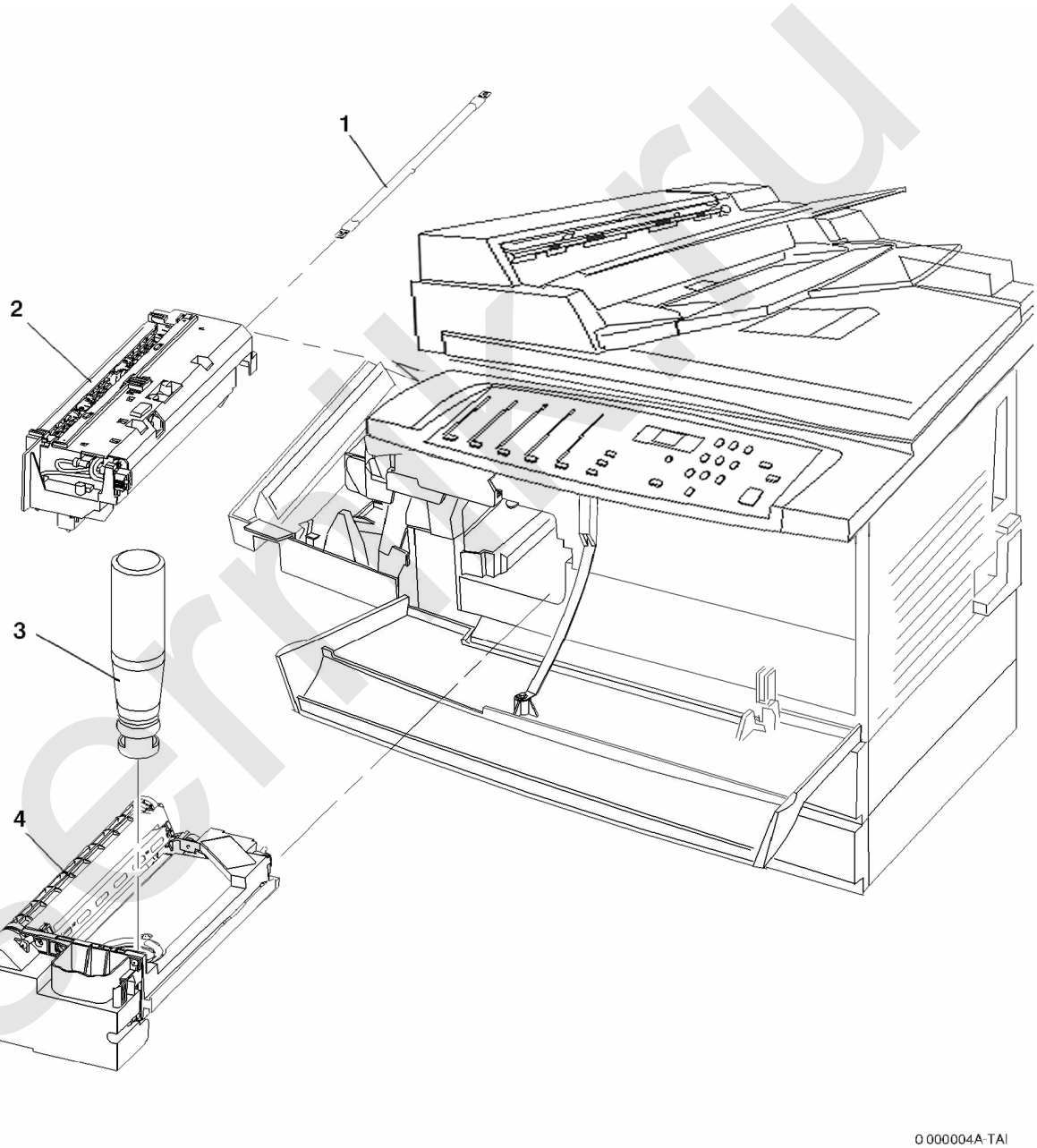

laserinfo.ru

PL 2.1 Элементы сканера

Поз.	Номер	Название
1	090E02550	CVT Glass (REP 6.4)
2	018K01250	Registration Guide
3	–	Prat of Imager Assembly (REP 6.7 PL 1.1 Item)
4	122E02580	Exposure Lamp (LP2) (REP 6.2)
5	105K18490	Exposure Lamp Power Supply (SP3) (REP 6.7)
6	–	Rear Power Supply (P/O PL 2.1 Item 5)
7	–	Front Power Supply (P/O PL 2.1 Item 5)
8	–	Harness (P/O PL 2.1 Item 5)
9	–	Harness (P/O PL 2.1 Item 3)
10	–	Imager House (P/O Item 3)
11	–	Scan Driver Motor (MOT2) (P/O PL 2.1 Item 3)
9	130E09310	Scan Home Sensor (Q2)

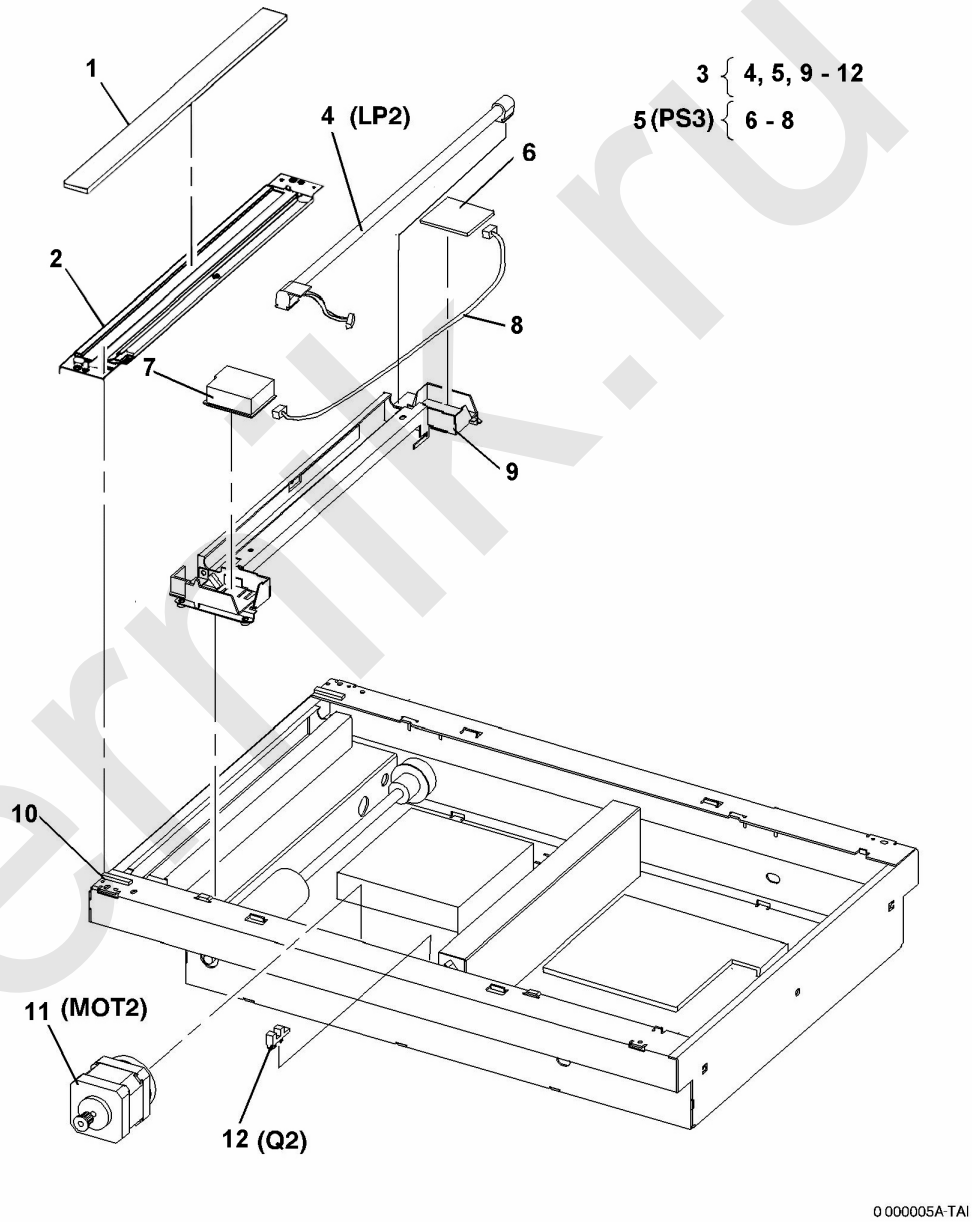

laserink.ru

PL 3.1 Модуль ADF (1 из 2)

Поз.	Номер	Название
1	–	Part of ADF Module (REF: PL3.1 Item 1)
2	050K54810	Oct Output Tray Extension (P/O Item 1)
3	–	Offset Catch Tray (Rep 6.7 PL Item)
4	–	ADF Driver Cover (REP 5.2)
5	022K60222	Feed Roll (REP 5.5)
6	121K33560	Document Nudger Solenoid (REP 5.4)
7	107E94941	Document Present Sensor (REP 5.10)
8	107E94941	Document Pre Registration Sensor (REP 5.11)
9	–	Catch Tray Extension
10	160K96430	ADF Control PWB (REP 5.7)
11	–	OCT Motor Bracket (MOT2) (P/O PL 3.1 Item 3)
12	127K30560	OCT Motor (MOT2) (P/O PL 2.1 Item 3) (REP 5.15)
13	–	Document Feeder Housing
14	–	Tray Extension Kit
15	038K13220	Copy Exit Guide
16	802K53830	ADF Access Door (REP 5.13)

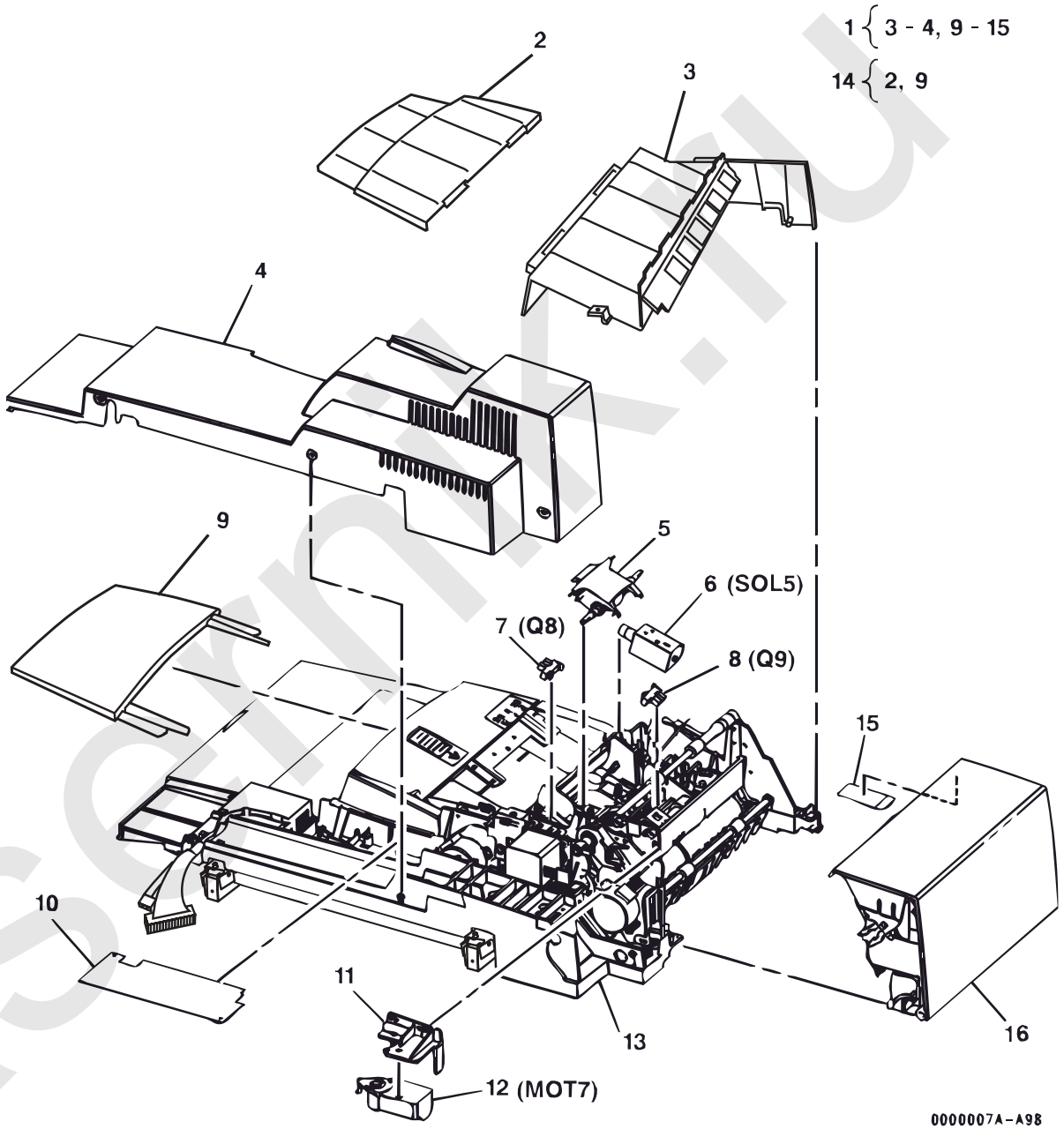

lasermx.ru

PL 3.2 Модуль ADF (2 из 2)

Поз.	Номер	Название
1	–	Part of ADF Module (REF: PL 3.2 Item 1)
2	–	Document Input Transport (P/L 3.2 Item 1) (REP 5.14, ADJ 5.1)
3	121K25271	Document Feed Clutch (REP 5.14)
4	–	Copy Exit Motor Bracket (P/O PL 3.2 Item 1)
5	127K43940	Copy/Print Exit Motor (REP 5.16) (P/O PL 3.2 Item 1)
6	001E76280	Document Transport (Input Tray) (REP 5.14)
7	038K13331	Document Output Guide
8	–	CVT Motor Bracket (P/O PL 3.2 Item 1)
9	127K43720	CVT Motor (REP) (P/O PL 3.2 Item 1)
10	055K34430	Baffle Passive Assembly (P/O PL 3.2 Item 1)
11	–	Paper Guide (P/O PL 3.2 Item 1)
12	–	Frame Stiffener (P/O PL 3.2 Item 1)
13	130K65042	Document Exit Switch (REP 5.12)
14	130E09390	Registration Sensor (REP 5.9)
15	809E48730	CVT Idler Spring
16	–	Document Feeder Housing
17	962K16430	ADF Interface Cable
18	059K34770	Retard Roller (REP 5.6)

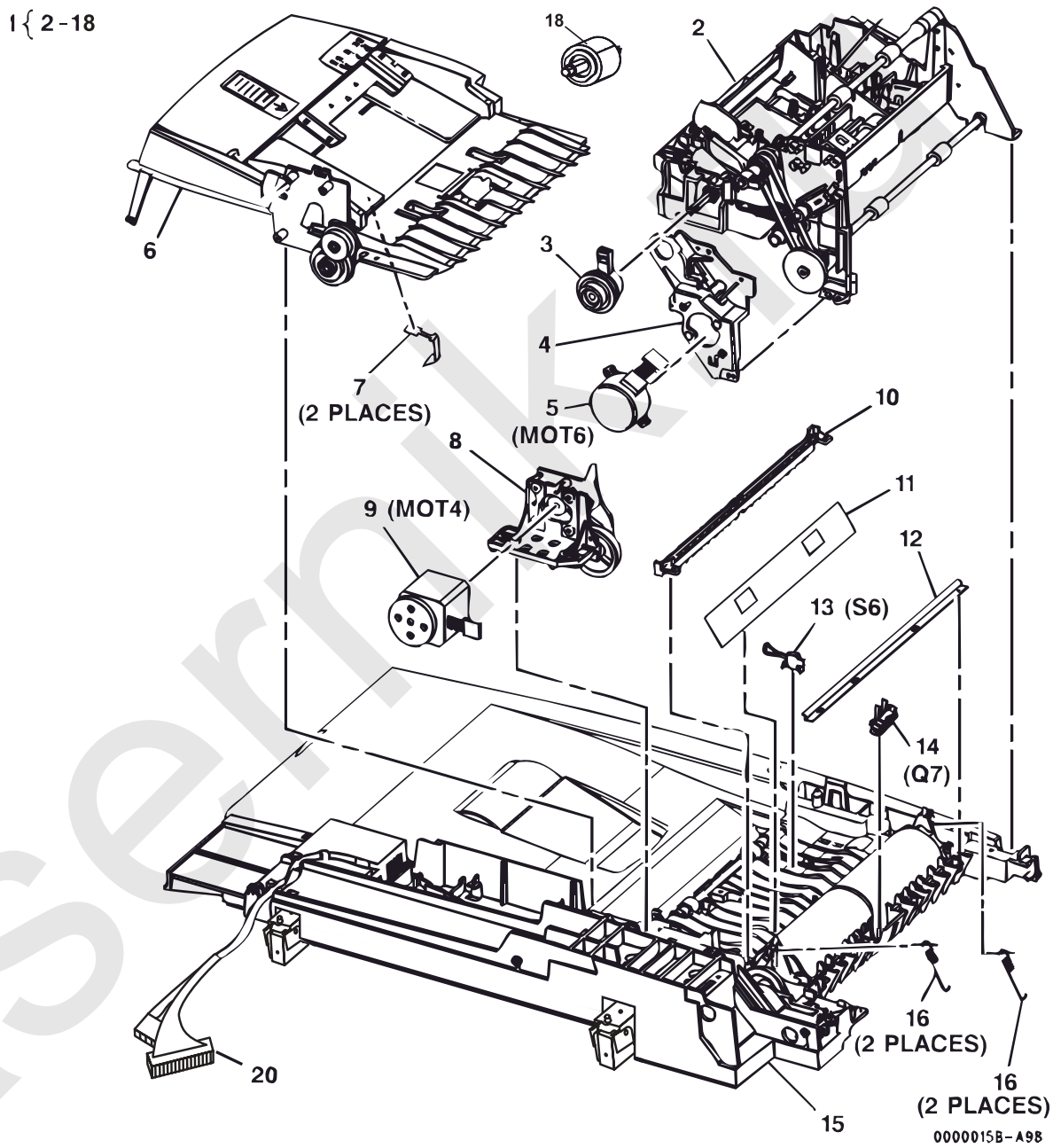

laserniki

PL 4.1 Узел панели управления

Поз.	Номер	Название
1	–	Part of Control Panel Assembly (REP PL 1.1 Item 1)
2	–	Control Panel Label (P/O PL 4.1 Item 1)
3	–	Control Panel Top Cover (P/O PL 4.1 Item 1)
4	604K17730	Control Panel Repair Kit
5	–	Print Pause Resume Button (P/O PL 4.1 Item 4)
6	–	Stop Clear Button (P/O PL 4.1 Item 4)
7	–	Start Button (P/O PL 4.1 Item 4)
8	–	Numeric Button (P/O PL 4.1 Item 4)
9	–	Features Button (P/O PL 4.1 Item 4)
10	–	Single /Duplex Button (P/O PL 4.1 Item 4)
11	–	Pagination Button (P/O PL 4.1 Item 4)
12	–	Key Button (P/O PL 4.1 Item 4)
13	–	Control Panel Harness (Not Spared)
14	160K96350	Control Panel PWB

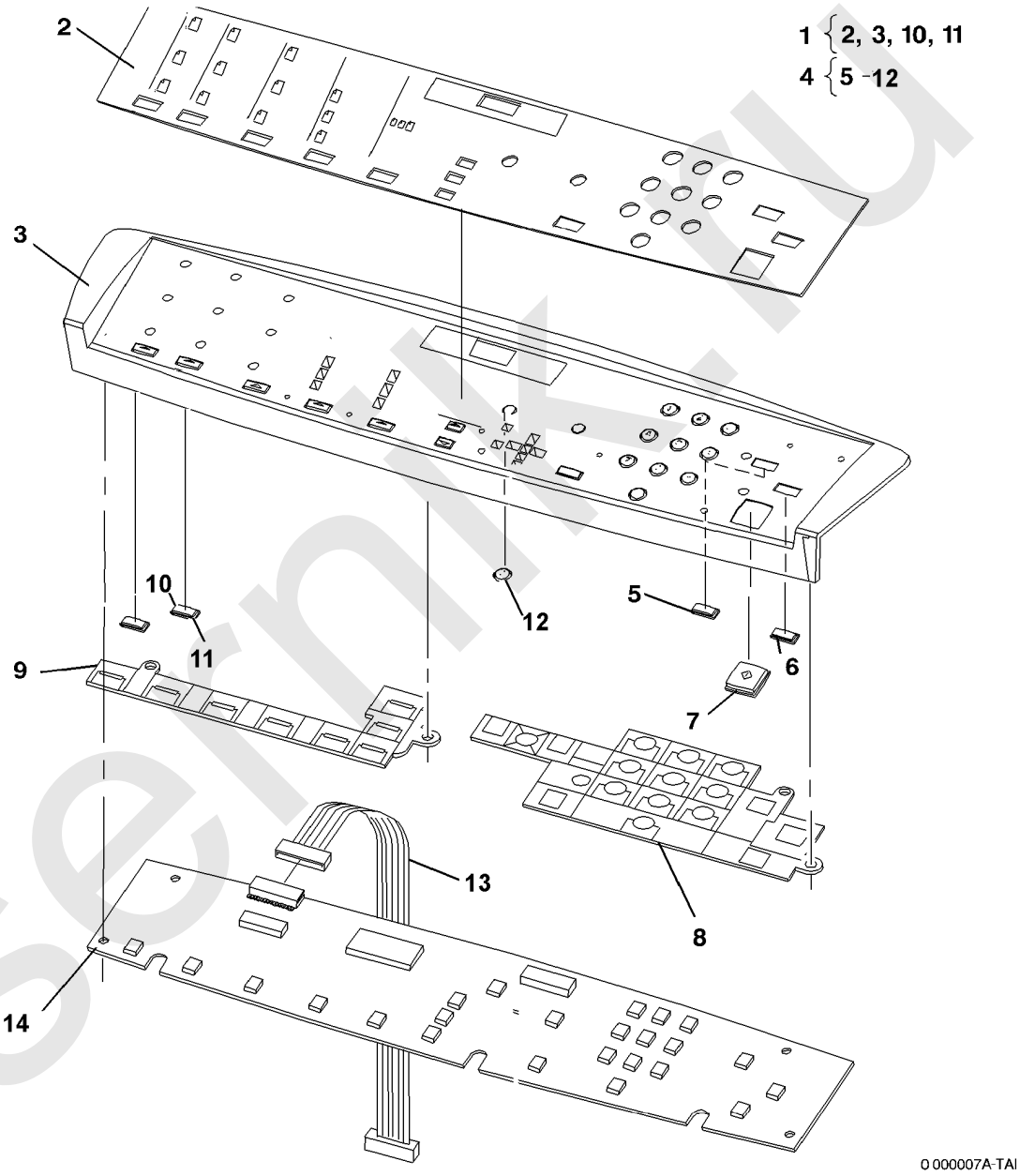

laserink.ru

PL 5.1 Лоток 1/лоток 2

Поз.	Номер	Название
1.	–	Tray 1 Module (REF: поз. 2) (Note: Tray 1 Same as Tray 2, Minus Rear Cover, Right Cover and Harness) (REP 8.19A REP 8.19B)
2.	097S02578	Tray 2 Module (REP 8.9A REP 8.9B)

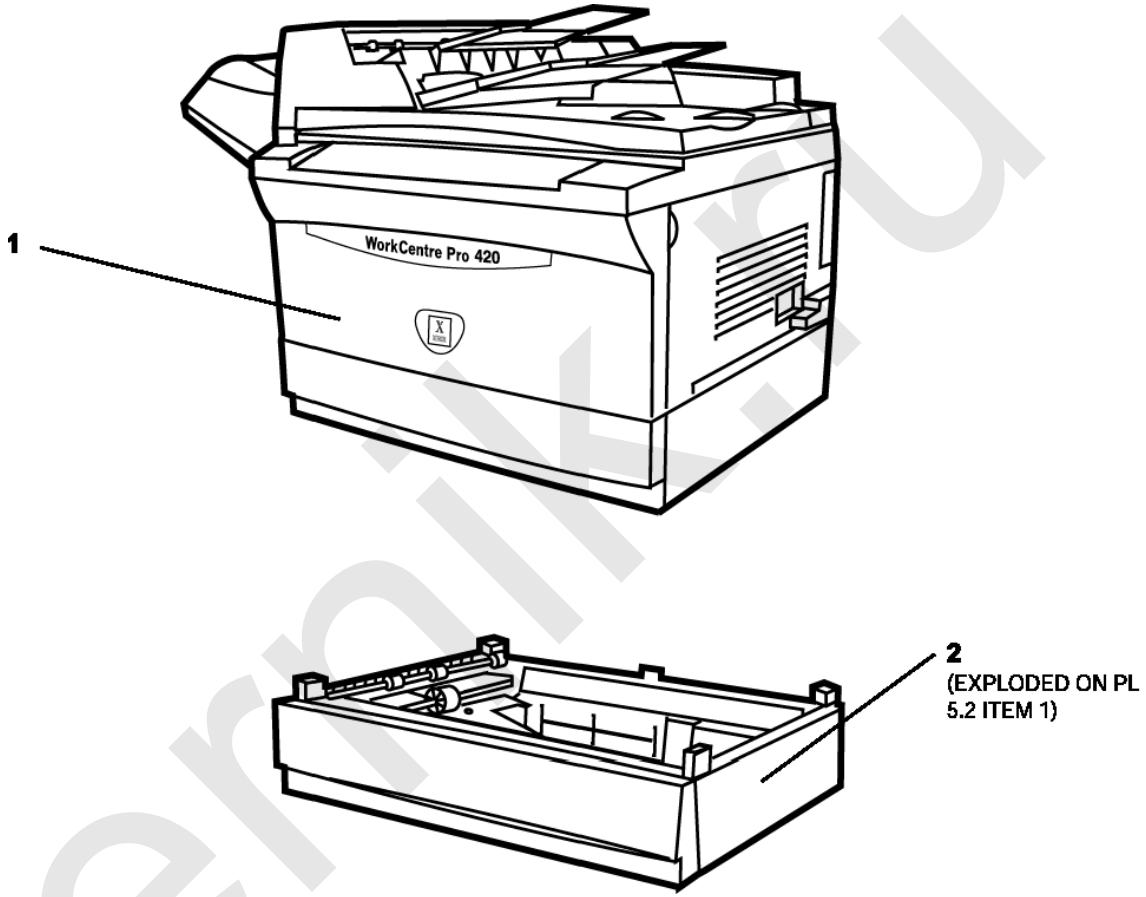

laserniki.ru

PL 5.2 Модуль лотка

Поз.	Номер	Название
1	–	CIM Module
2	160K96420	Tray 1 Control PWB
3	110K14070	Harness
4	962K17460	Paper Size Switch
5	127K43280	CIM Motor (REP 18.15)
6	–	CIM Motor Bracket
7	807E05500	Gear (T51/15)
8	007E66810	Gear (T40/18)
9	007E01240	Gear (T37)
10	011K02940	Joint Assy Drive
11	121K28300	CIM Clutch (REP 8.14)
12	413W77559	Bearing
13	–	CIM Clutch Bracket
14	007E66820	Gear (T38/26)
15	–	Harness
16	–	Bracket
17	120E25110	No Paper Sensor Actuator
18	130E82740	No Paper Sensor (REP 8.23)
19	–	No Paper Sensor Bracket
20	–	Harness
21	130E82740	Take Away Sensor (REP 8.24)
22	–	Take Away Sensor Bracket
23	–	Harness
24	604K18040	Left Cover Interlock Switch Kit (REP 8.25) (Include 25-26)
25	–	Left Cover Interlock Bracket
26	–	Left Cover Interlock
27	007E60720	Gear (T22)
28	413W77559	Bearing
29	120E25170	Take Away Sensor Actuator
30	059K34020	T/A Roller
31	809E48760	Spring
32	013E90840	Bearing
33	–	Upper Feed Chute
34	604K18010	Left Cover Baffle Kit
35	–	Left Cover
36	050K54370	Tray
37	–	Tray Outline Border
38	802E53140	Right Cover (REP 14.3)
39	802E53130	Rear Cover (REP 14.2)

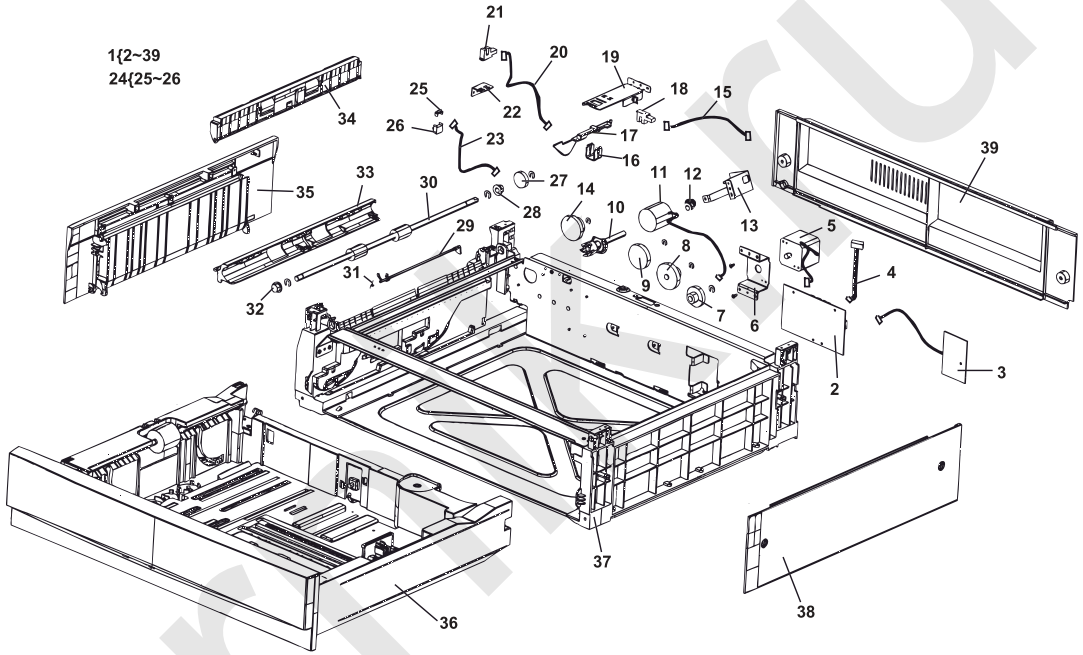

laserfix.ru

PL 5.3 Элементы лотка (1 из 3)

Поз.	Номер	Название
1	–	Tray Assembly
2	050K54370	Feeder Assembly
3	054E25140	Chute
4	059K21970	Feed Roller Assembly (REP 8.15)
5	006K28430	Shaft Assembly
6	–	Bearing
7	–	Roller
8	–	Earth Plate
9	–	Screw
10	809E33160	Spring
11	031E10340	Holder
12	019K97497	Retard Holder Assembly (REP 8.17)
13	–	Retard Housing
14	059K21960	Retard Roller
15	–	Shaft
16	005K06110	Friction Clutch
17	–	Retard Holder
18	809E49210	Spring
19	–	Bearing

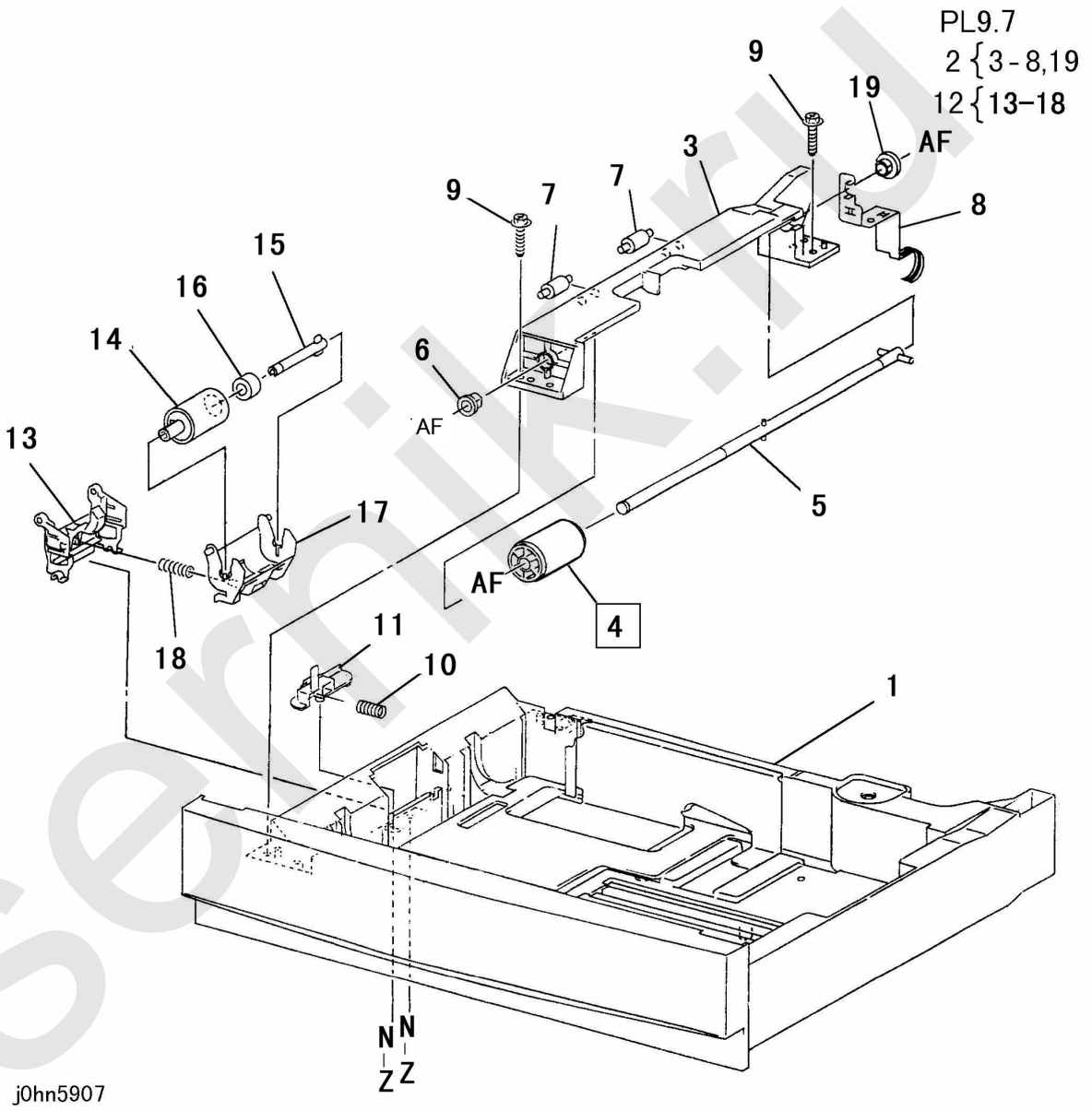

laserpik.ru

PL 5.4 Элементы лотка (2 из 3)

Поз.	Номер	Название
1	–	Housing
2	–	Label Instruction
3	–	Label Instruction (End Guide)
4	038E29640	End Guide
5	038E29870	Plate End Guide
6	038E24300	Guide
7	809E14810	Spring
8	807E05440	Gear
9	007E55290	Idler Gear
10	008E93921	Size Cam (REP 8.16)
11	–	End Guide Lock
12	–	Screw
13	029E14970	Pin
14	–	Cover
15	–	Screw
16	–	Screw
17	–	Cover
18	809E48590	Earth Spring
19	–	Latch
20	003K17710	Rear Latch
21	809E32960	Spring
22	003K17700	Front Latch

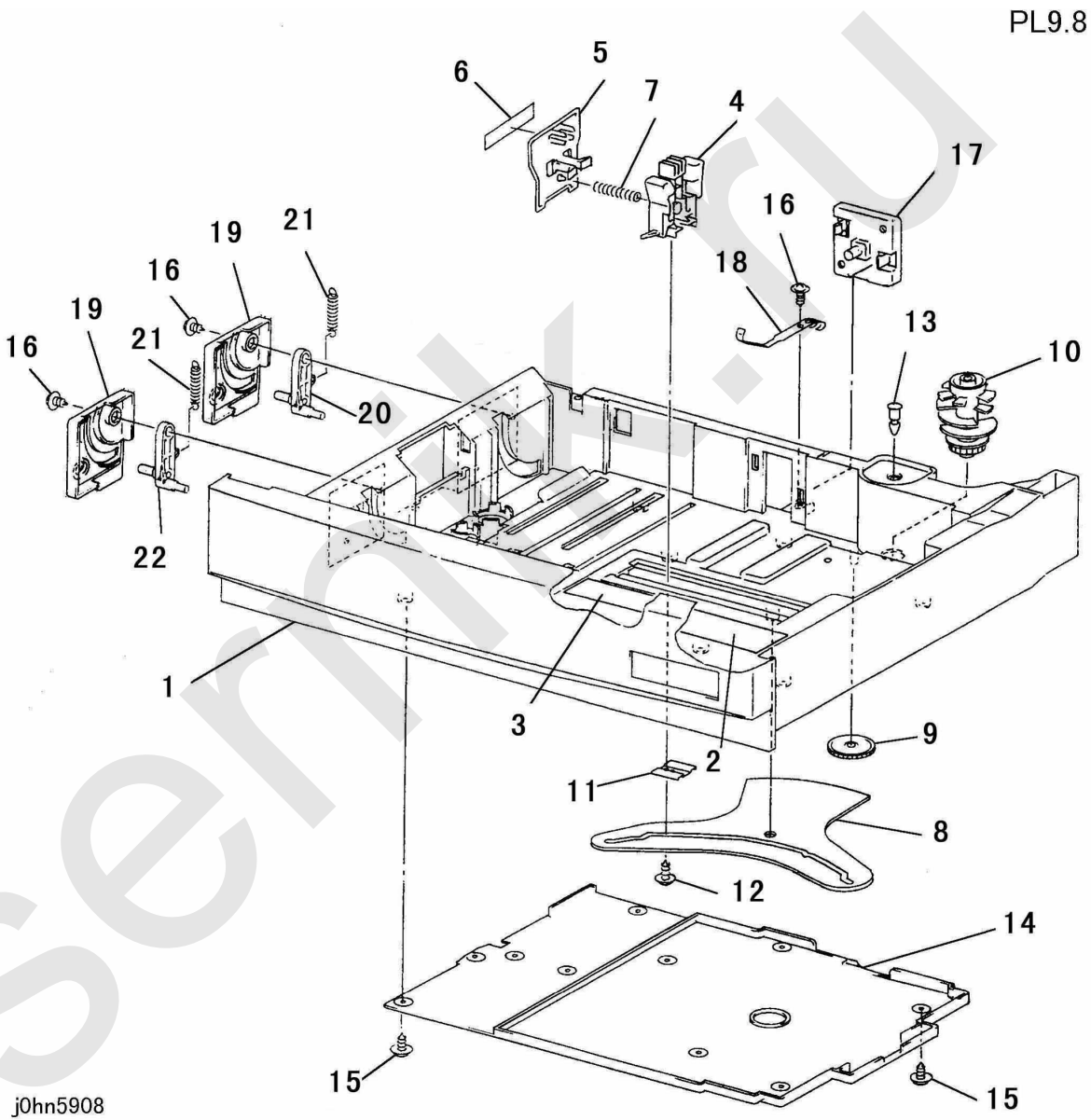

laserinx.ru

PL 5.5 Элементы лотка (3 из 3)

Поз.	Номер	Название
1	–	Bottom Flate Assembly (Upper)
2	038E29630	Side Baffle (Rear)
3	038E29620	Side Baffle (Front)
4	–	Bottom Plate
5	807E05430	Rack
6	807E05450	Rack
7	007E55261	Pinion
8	–	Guide
9	809E34771	Spring
10	–	Spring Plate
11	–	Cap
12	011E14240	Lever
13	–	Label (Max)
14	–	Label (OHP Max)
15	809E38040	Spring
16	809E38050	Spring
17	–	Label (Size)
18	809E48460	Spring
19	–	Latch
20	–	Screw

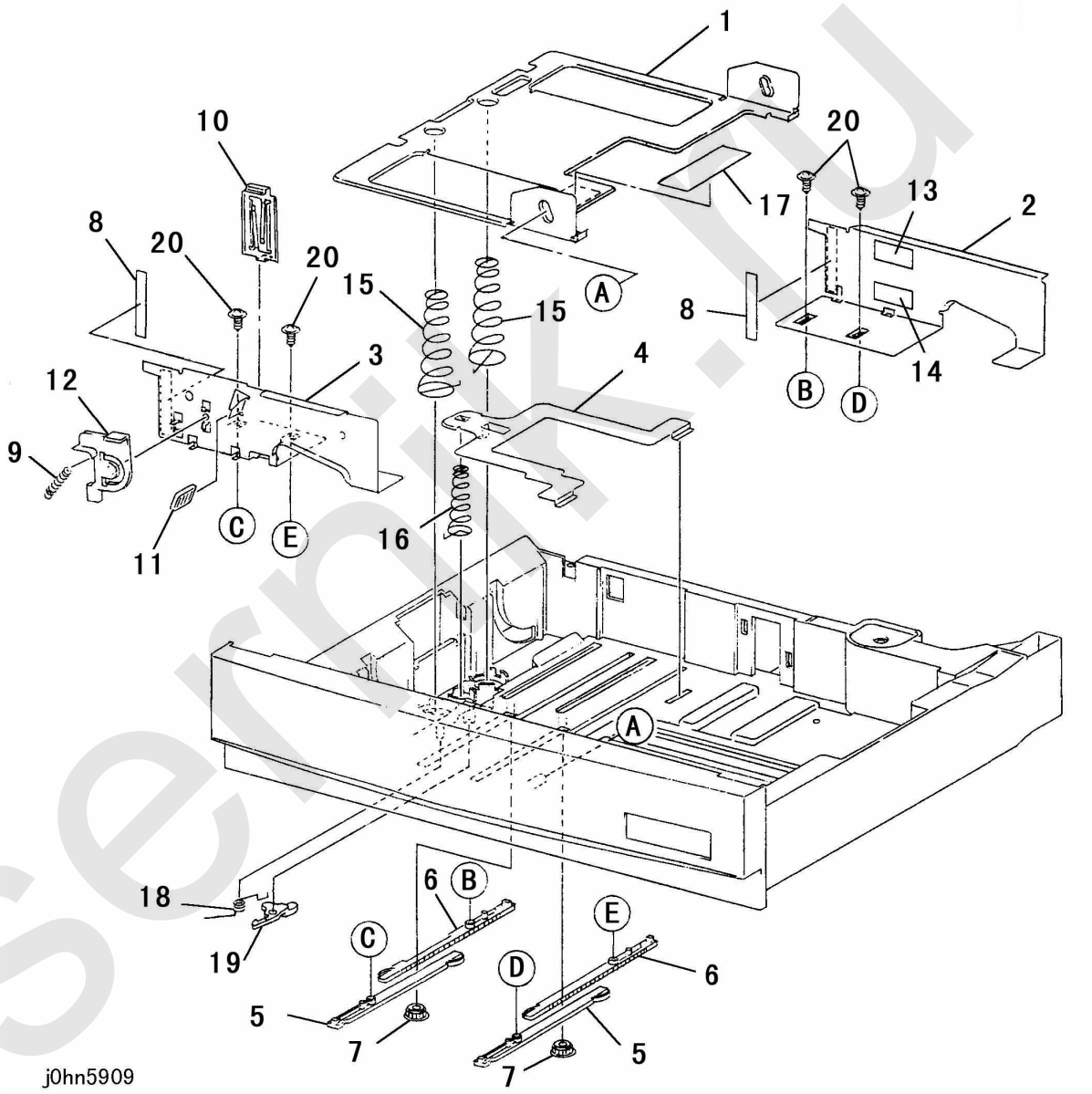

laserpik.ru

PL 6.1 Элементы узла регистрации и коротрона

Поз.	Номер	Название
1	125K03930	Registration Assembly (REP 8.2)
2	125K03950	Transfer Detack Corpotron (REP 9.2)
3	604K00570	Corotron Wire Kit (REP 9.3)
4	–	Transfer Detack Corotron Wire (P/O PL 5.1 Item 2)
5	–	Spring (P/O PL 6.1 Item) (P/O PL 5.1 Item 5)
6	–	Transfer/Detack Corotron Support (P/O PL 5.1 Item 5)
7	–	Registration Framework (P/O PL 5.1 Item 5)
8	604K00580	Registration Roller Kit (REP 8.6)
9	–	Registration Roller (P/O PL 5.1 Item 8) (REP 8.6)
10	–	Bearing (P/O PL 5.1 Item 8)
11	604K00590	Registration Clutch Kit (CL1) (REP 8.5)
12	604K00600	Registration Sensor Kit (Q1) (REP 8.6)

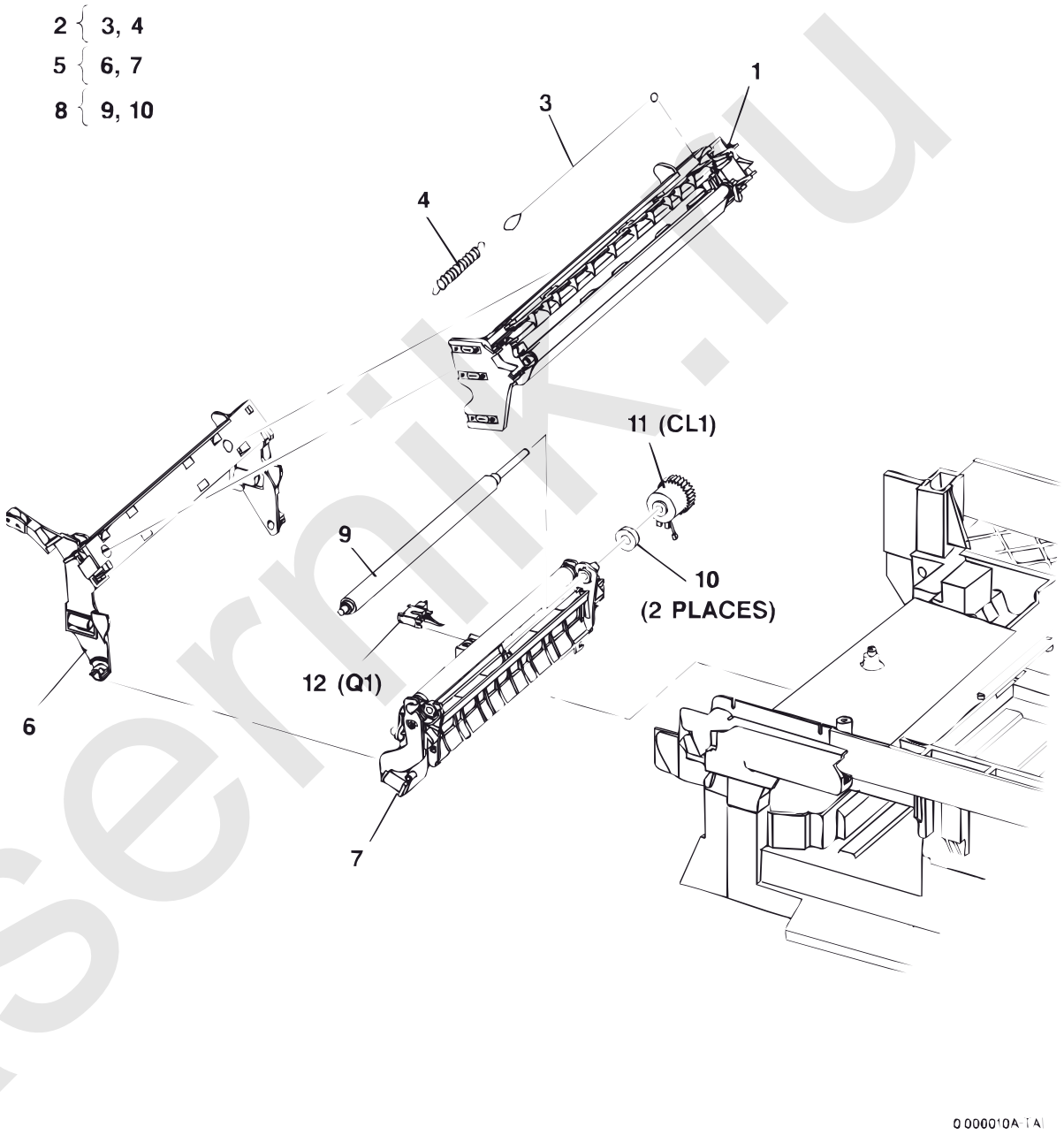

laserpix.ru

PL 7.1 Левая дверца

Поз.	Номер	Название
1	–	Door Module (REP 8.1)

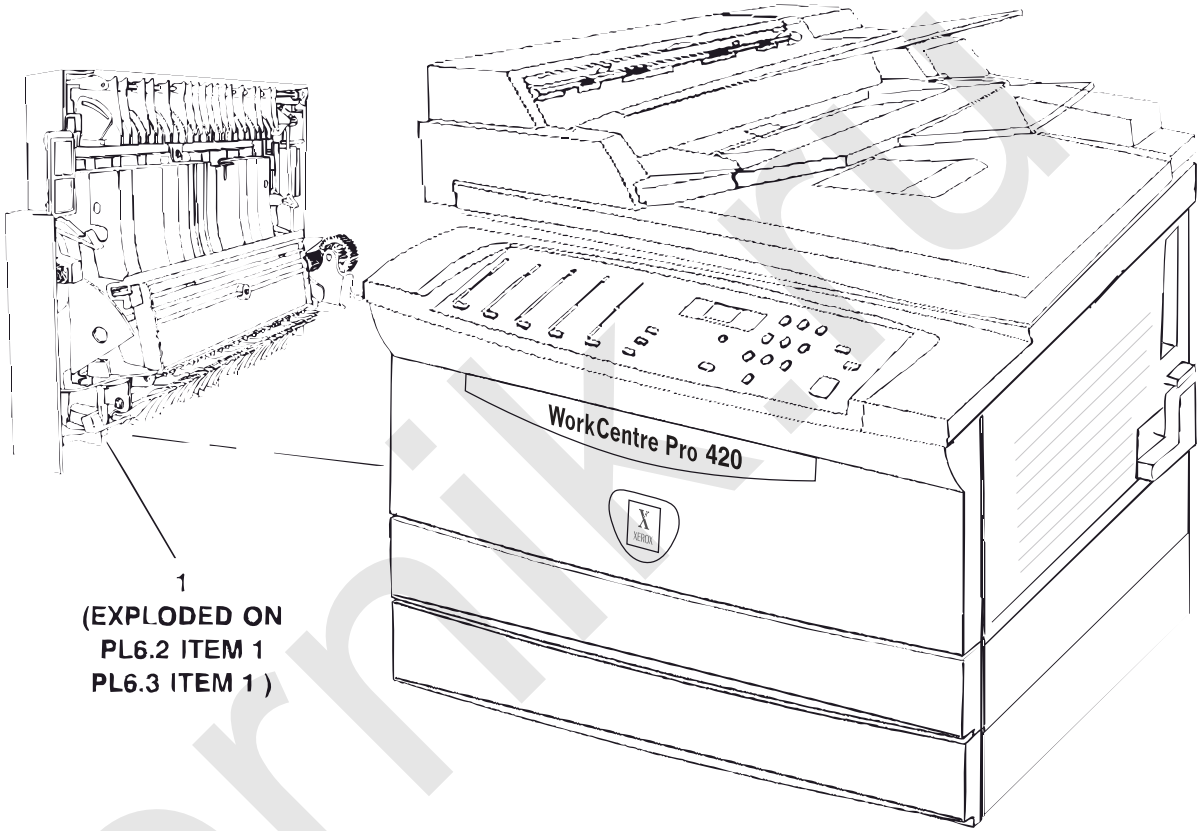

0 000011A TAI

laserniki.ru

PL 7.2 Элементы левой дверцы (1 из 2)

Поз.	Номер	Название
1	–	Part Of Door Module (REP PL 7.1 Item 1)
2	006K28370	Driver Gate (P/O PL 7.2 Item 1)
3	121E18780	Driver Gate Solenoid (P/O PL 7.2 Item 1)
4	–	24Belt (P/O PL 7.2 Item 1)
5	–	Transport Gear (P/O PL 7.2 Item 1)
6	–	Exit Transport (P/O PL 7.2 Item 1)
7	130K83340	Exit Sensor (Q3) (REP 8.21)
8	962K02671	Exit Sensor Harness (P/O PL 7.2 Item 1)
9	–	Door Connector (P/O PL 7.2 Item 1)
10	604K04010	Door Gear Kit
11	–	Sector Gear Spring (P/O PL 7.2 Item 7)
12	–	Shaft (P/O PL 7.2 Item 7)
13	–	Gear (18T/15T) (P/O PL 7.2 Item 7)
14	–	Sector Gear (P/O PL 7.2 Item 7)
15	008E07390	Cam (P/O PL 7.2 Item 7)
16	–	Gears and Housing (P/O PL 7.2 Item 7)
17	121E17524	Bypass Solenoid (SOL 4) (REP 8.23)
18	–	Spring
19	604K04000	Door Latch Kit
20	–	Door Latch (P/O PL 6.2 Item 15)
21	–	Latch Shaft (P/O PL 6.2 Item 15)
22	–	Door Handle (P/O PL 6.2 Item 15)
23	–	Door Latch Spring (P/O PL 6.2 Item 15)
24	604K04140	Door Tether Kit
25	–	Rear Tether (P/O PL 7.2 Item 20)
26	–	Front Tether (P/O PL 7.2 Item 20)
27	–	Hinge Lock (P/O PL 7.2 Item 1)
28	–	Door (P/O PL 7.2 Item 1)
29	–	Gear (T18) (P/O PL 7.2 Item 1)
30	–	Bypass Retard Pad Kit (P/O PL 7.2 Item 1)
31	019K06310	Bypass Retard Pad (REP 8.12)
32	809E49500	Retard Pad Spring (P/O PL 7.2 Item 1)
33	–	Spring
34	–	Lower Guide
35	–	Main Baffle (REP 8.22)

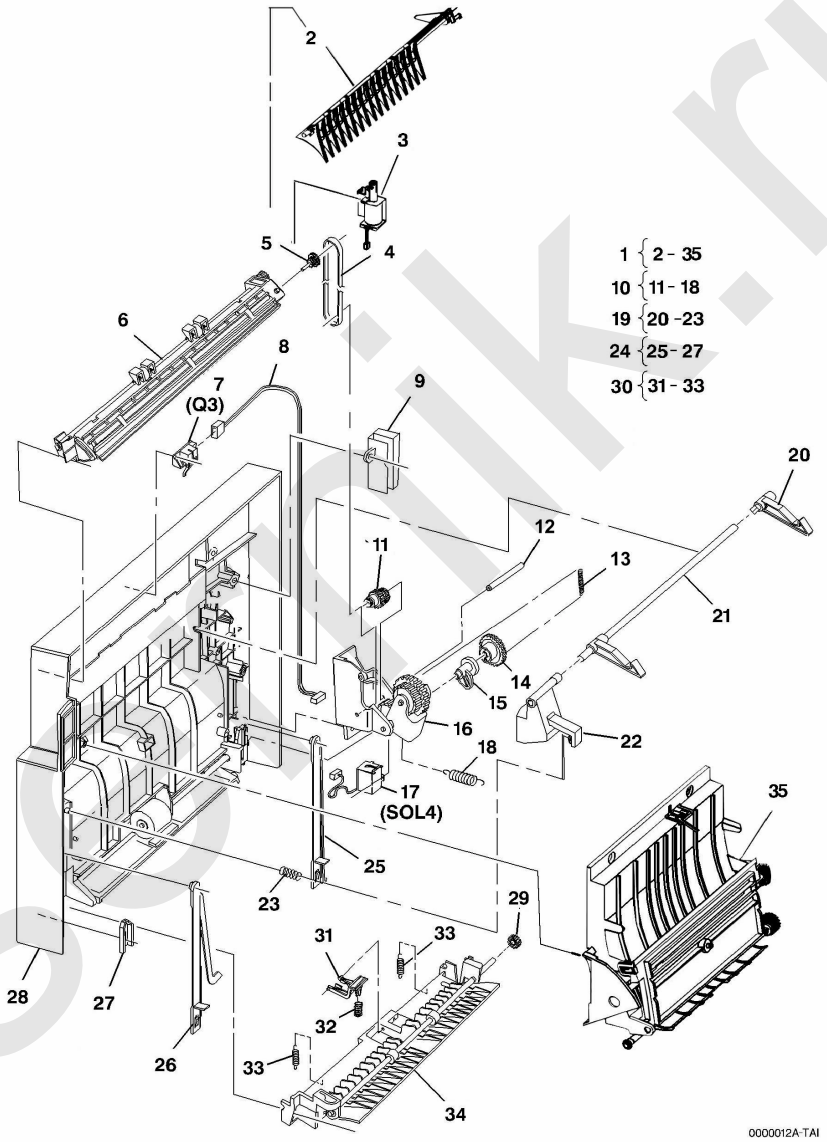

lasorik.ru

PL 7.3 Элементы левой дверцы (2 из 2)

Поз.	Номер	Название
1	–	Part of Door Module (REP PL 7.1 Item 1)
2	050K53311	Side Output Tray (REP 8.7)
3	–	Door (P/O PL 7.3 Item 1)
4	050K53451	Bypass Tray Kit (P/O PL 7.3 Item 1) (REP 8.8)
5	–	Bypass Tray (P/O PL 7.3 Item 4)
6	–	Bypass Tray Extensior (P/O PL 7.3 Item 4)
7	–	Cover (P/O PL 7.3 Item 4)
8	059K28550	Bypass Feed Roller (REP 8.11)

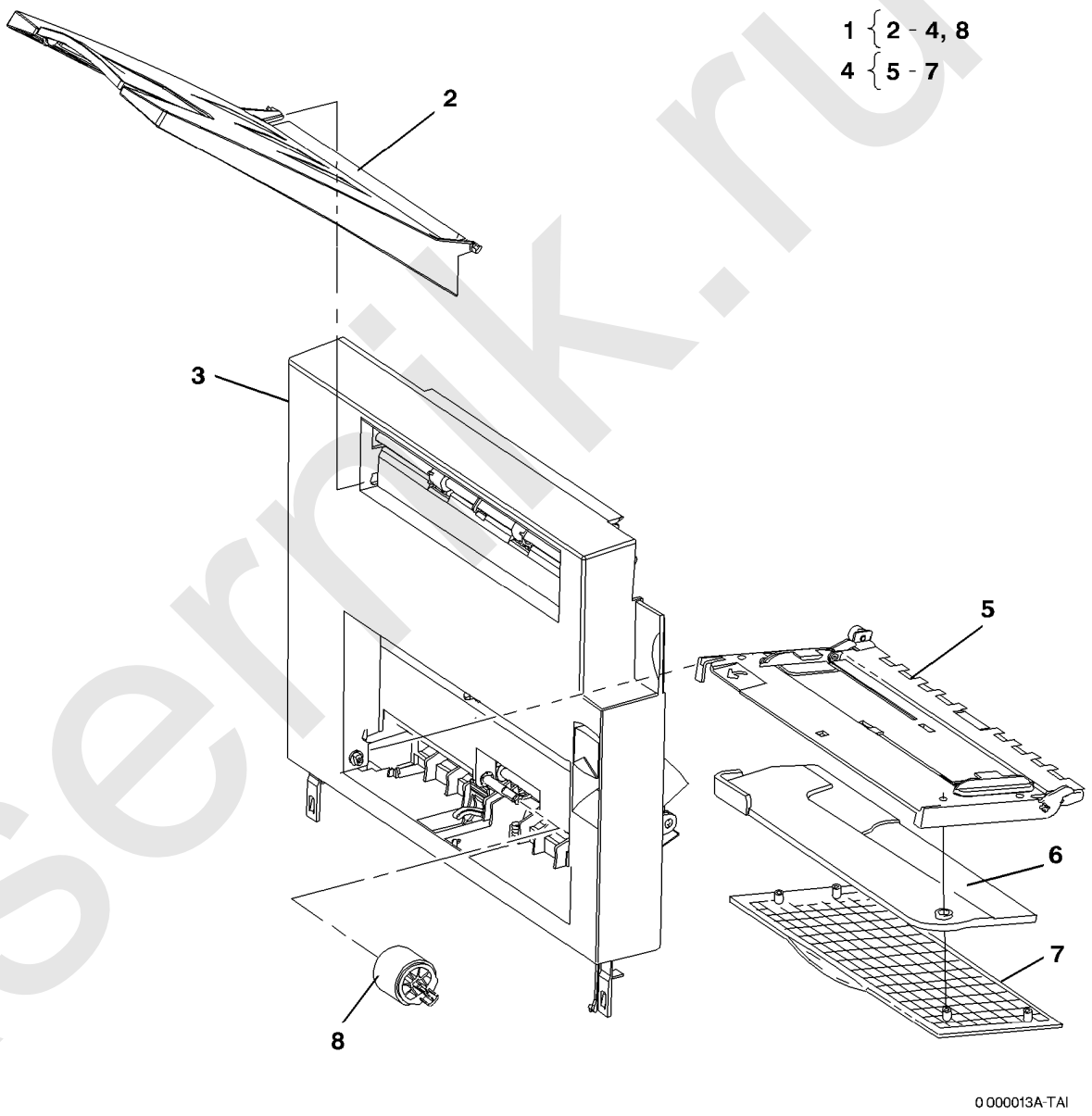

laserrik.ru

PL 8.1 Крышки

Поз.	Номер	Название
1	802E51970	Rear Cover (REP 14.2)
2	–	Optics Locking Screw (Not Spared)
3	802E52200	Right Cover (REP 14.3)
4	001E73111	Front Door Tether
5	893E01350	J1/J7 Label (English)
–	893e01290	J1/J7 Label (Chinese)
6	802K62460	Front Door (REP 14.6)

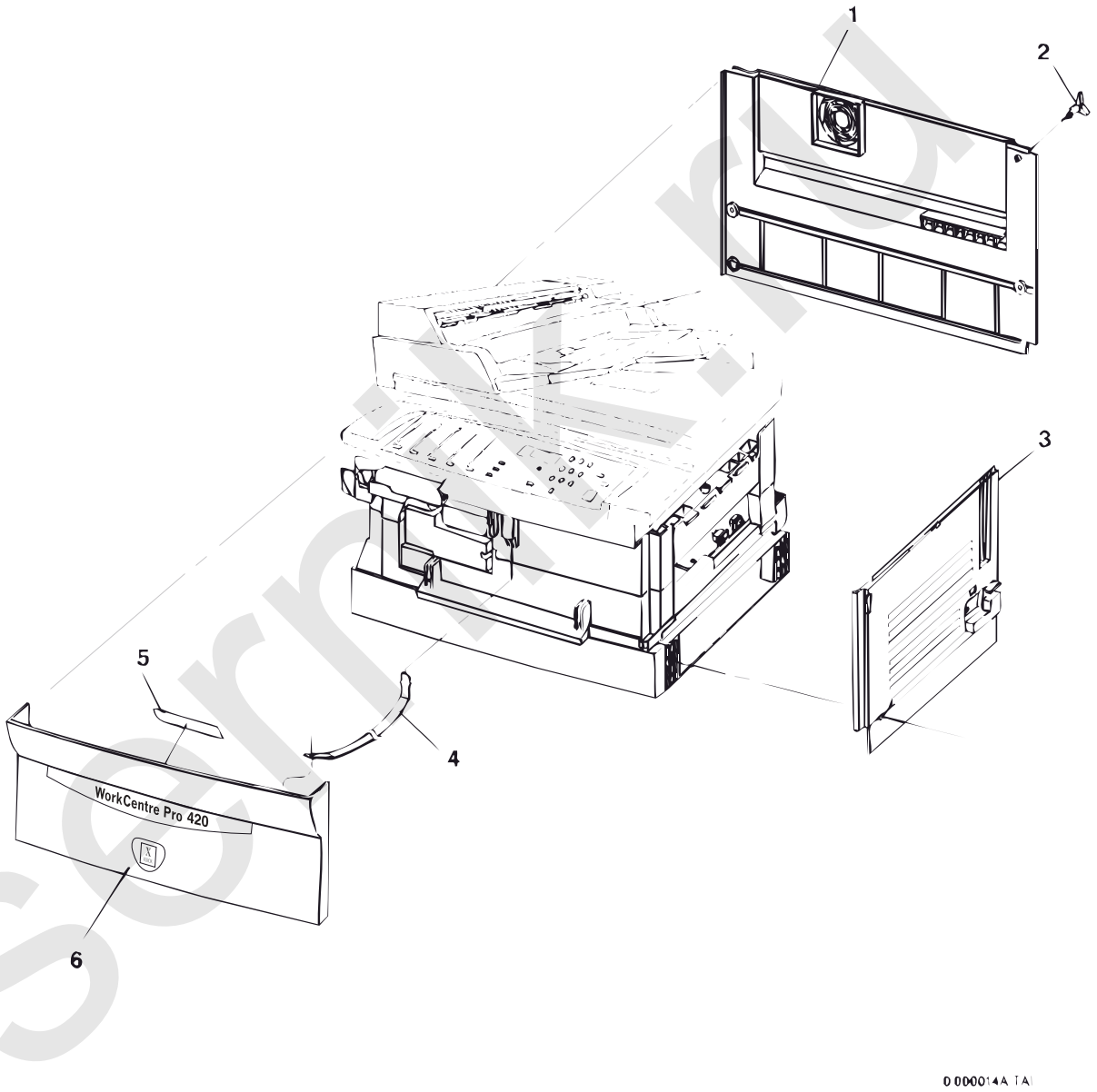

laserinfo.ru

PL 8.2 Стойка

Поз.	Номер	Название
1	–	Print/Copier (Not Spared)
2	–	Stand Installation Screw (P/O PL 7.2)
3	604K04020	Stand Repair Kit
4	–	Locator Registration (P/O PL 7.2 Item 3)
5	–	Magnet (P/O PL 7.2 Item 3)
6	017K00590	Swivel Caster
7	017E08790	Rigid Caster
8	802K39340	Stand Door
9	097S02556	Stand

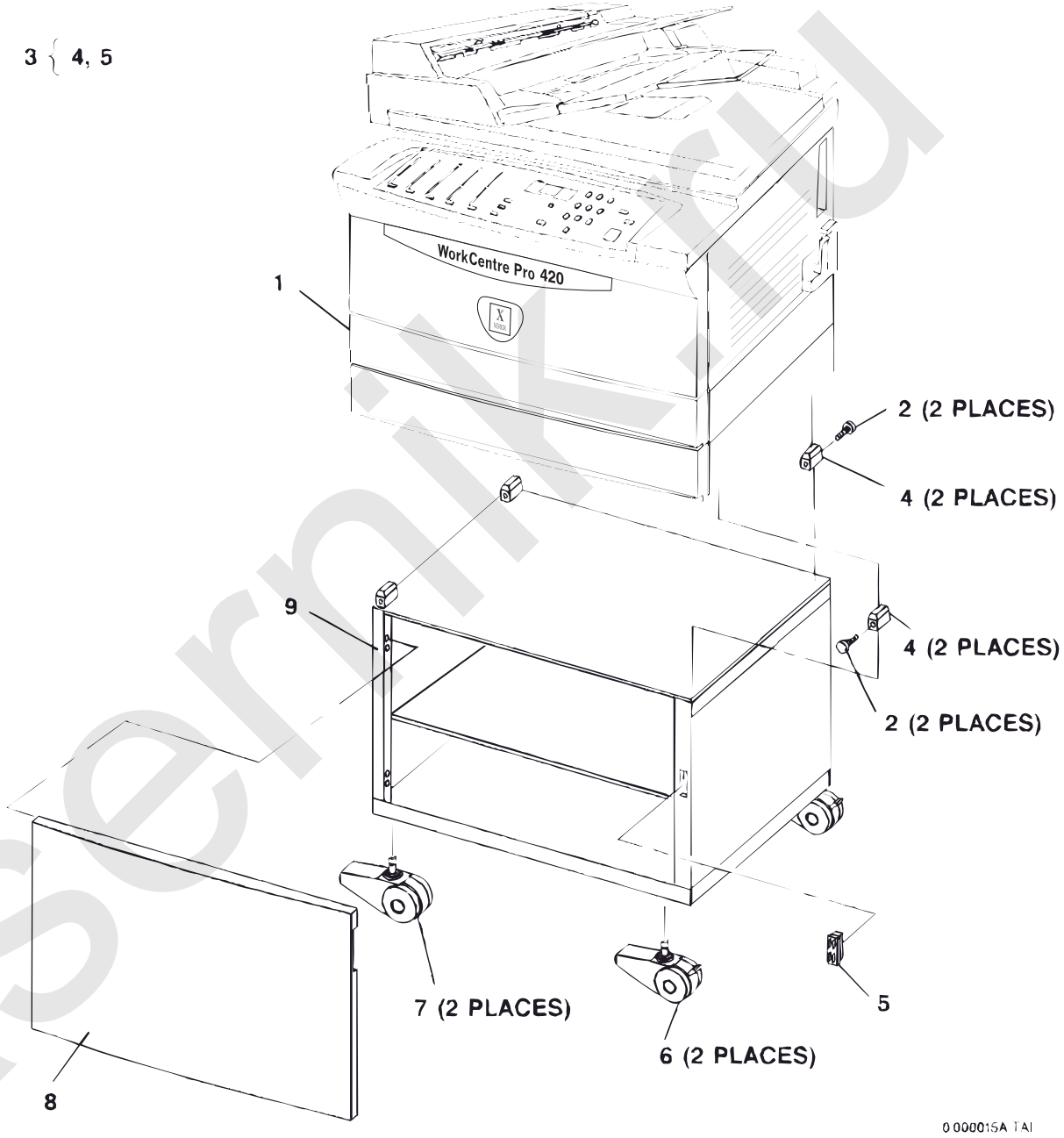

laserniki.ru

Указатель номеров запасных частей

Таблица 1 Указатель номеров запасных частей

Номер по каталогу	Перчень запасных частей
802K53800	PL 1.1
802K62090	PL 1.1
802E51840	PL 1.1
809E48410	PL 1.1
802E95250	PL 1.1
892E54181	PL 1.1
090E02520	PL 1.1
101K48480	PL 1.1
101K49020	PL 1.1
801K13160	PL 1.1
062K13011	PL 1.2
160K96570	PL 1.2
120E20080	PL 1.2
604K17760	PL 1.2
055E49173	PL 1.2
105E15500	PL 1.2
007K12173	PL 1.2
960K10230	PL 1.2
127K41250	PL 1.2
014K07852	PL 1.2
604K04040	PL 1.2
809E45010	PL 1.2
117E23652	PL 1.2
117E22910	PL 1.2
105K26600	PL 1.3
105E15490	PL 1.3
105E15680	PL 1.3
160K96140	PL 1.3
960K10030	PL 1.3
962K16160	PL 1.3
962K20650	PL 1.3
115K02072	PL 1.3
604K17750	PL 1.3
130K66180	PL 1.3
122K02330	PL 1.3
604K17860	PL 1.3
126E02101	PL 1.4
126E02111	PL 1.4
126K22680	PL 1.4

Таблица 1 Указатель номеров запасных частей

Номер по каталогу	Перечень запасных частей
126K22540	PL 1.4
106R00280	PL 1.4
101R00022	PL 1.4
101R00023	PL 1.4
101R00024	PL 1.4
101R00025	PL 1.4
101R00026	PL 1.4
090E02550	PL 2.1
018K01250	PL 2.1
122E02580	PL 2.1
105K18490	PL 2.1
130E09310	PL 2.1
050K54810	PL 3.1
022K60222	PL 3.1
121K33560	PL 3.1
107E94941	PL 3.1
107E94941	PL 3.1
160K96430	PL 3.1
127K30560	PL 3.1
038K13220	PL 3.1
802K53830	PL 3.1
121K25271	PL 3.2
127K43940	PL 3.2
001E76280	PL 3.2
038K13331	PL 3.2
127K43720	PL 3.2
055K34430	PL 3.2
130K65042	PL 3.2
130E09390	PL 3.2
809E48730	PL 3.2
962K16430	PL 3.2
059K34770	PL 3.2
604K17730	PL 4.1
160K96350	PL 4.1
097S50213	PL 5.1
160K96420	PL 5.2
110K14070	PL 5.2
962K17460	PL 5.2
127K43280	PL 5.2
807E05500	PL 5.2
007E66810	PL 5.2

Iserik.ru

Таблица 1 Указатель запасных частей

Номер по каталогу	Перчень запасных частей
007E1240	PL 5.2
11K02940	PL 5.2
121K28300	PL 5.2
413W77559	PL 5.2
007E66820	PL 5.2
120E25110	PL 5.2
130E82740	PL 5.2
130E82740	PL 5.2
604K18040	PL 5.2
007E60720	PL 5.2
413W77559	PL 5.2
120E25170	PL 5.2
059K34020	PL 5.2
809E48760	PL 5.2
013E90840	PL 5.2
604K18010	PL 5.2
50K54370	PL 5.2
802E53140	PL 5.2
802E53130	PL 5.2
050K54390	PL 5.3
054E25140	PL 5.3
059K21970	PL 5.3
006K28430	PL 5.3
809E33160	PL 5.3
031E10340	PL 5.3
019K97497	PL 5.3
059K21960	PL 5.3
005K06110	PL 5.3
809E49210	PL 5.3
038E29640	PL 5.4
038E29870	PL 5.4
038E24300	PL 5.4
809E14810	PL 5.4
807E05440	PL 5.4
007E55290	PL 5.4
008E93921	PL 5.4
029E14970	PL 5.4
809E48590	PL 5.4
003K17710	PL 5.4
809E32960	PL 5.4
003K17700	PL 5.4

Таблица 1 Указатель запасных частей

Номер по каталогу	Перечень запасных частей
038E29630	PL 5.5
038E29620	PL 5.5
807E05430	PL 5.5
807E05450	PL 5.5
007E55261	PL 5.5
809E34771	PL 5.5
011E14240	PL 5.5
809E38040	PL 5.5
809E38050	PL 5.5
125K03930	PL 6.1
125K03950	PL 6.1
604K00570	PL 6.1
604K00580	PL 6.1
604K00590	PL 6.1
604K00600	PL 6.1
055E49342	PL 6.2
121E17523	PL 6.2
130K83340	PL 6.2
604K04000	PL 6.2
604K04011	PL 6.2
604K04141	PL 6.2
604K04381	PL 6.2
604K04390	PL 6.2
962K02670	PL 6.2
050K53311	PL 6.3
050K53451	PL 6.3
059K28550	PL 6.3
006K28370	PL 7.2
121E18780	PL 7.2
130K83340	PL 7.2
962K02671	PL 7.2
604K04010	PL 7.2
008E07390	PL 7.2
121E17524	PL 7.2
604K04000	PL 7.2
604K04140	PL 7.2
019K06310	PL 7.2
809E49500	PL 7.2
050K53311	PL 7.3
050K53451	PL 7.3
059K28550	PL 7.3

laserpik.ru

Таблица 1 Указатель запасных частей

Номер по каталогу	Перечень запасных частей
802E51970	PL 8.1
802E52200	PL 8.1
001E73111	PL 8.1
893E01350	PL 8.1
893E01290	PL 8.1
802K62460	PL 8.1
604K04020	PL 8.2
017K00590	PL 8.2
017E08790	PL 8.2
802K39340	PL 8.2
097S02556	PL 8.2

laserrnik.ru