8. Exploded Views and Parts List

Contents

8.1	Main Assembly	p.8-2
8.2	Base-Houshing Assembly	p.8-6
8.3	Frame Assembly (1)	p.8-7
	Frame Assembly (2)	p.8-8
8.4	Fuser Assembly	p.8-13
8.5	Main Driver Assembly	p.8-16
8.6	Exit Driver Assembly	p.8-17
8.7	Regi Assembly	p.8-18
8.8	SMPS Assembly	p.8-19
8.9	Cassette Assembly	p.8-21
8.10	SCF Assembly	p.8-23

Part Number & Description format.

Part numbers and descriptions are defined according to a company standard. The information below will help you to understand the part number format and assist when ordering spare parts.

- **There are two types of Part number format.**

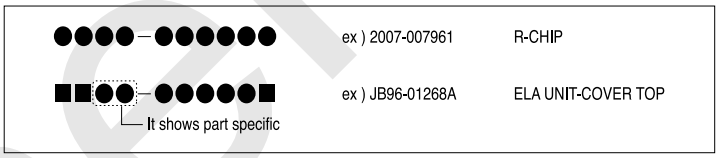

(● : number ■ : letter)

Type 1 : This format is used throughout Samsung on all product ranges.
Typically it is used for small components and electronic parts.

Type 2 : This format is controlled by individual Samsung Divisions and is used on specific products, typically for mechanical parts. Type 2 format part numbers fall into 2 categories:

- **A/S privately used part :** It is only used for A/S .
- **Ass'y part :** Assemblies consisting of 2 or more parts. Also used for Service manuals, user guides and diagrams.

- Ass'y parts and A/S privately used Parts can be distinguished by the part Code and Description. They are always Type 2 format. The 2 leading characters indicate private or assembly parts.

DIVISION	PART CODE	DESCRIPTION
A/S Private	**81-****** (JB81-00039A)	AS-********** (AS-USE)
ASS'Y Part	**75-****** (JB75-00068A)	MEC-******** (MEC-CHUTE)
ASS'Y Part	**92-****** (JB92-01131A)	PBA ********* (PBA MAIN-CONTROLLER)
ASS'Y Part	**97-****** (JB97-01089A)	MEA ********* (MEA UNIT-PULLEY IDLE)

laserniki.ru

8.1 Main Assembly

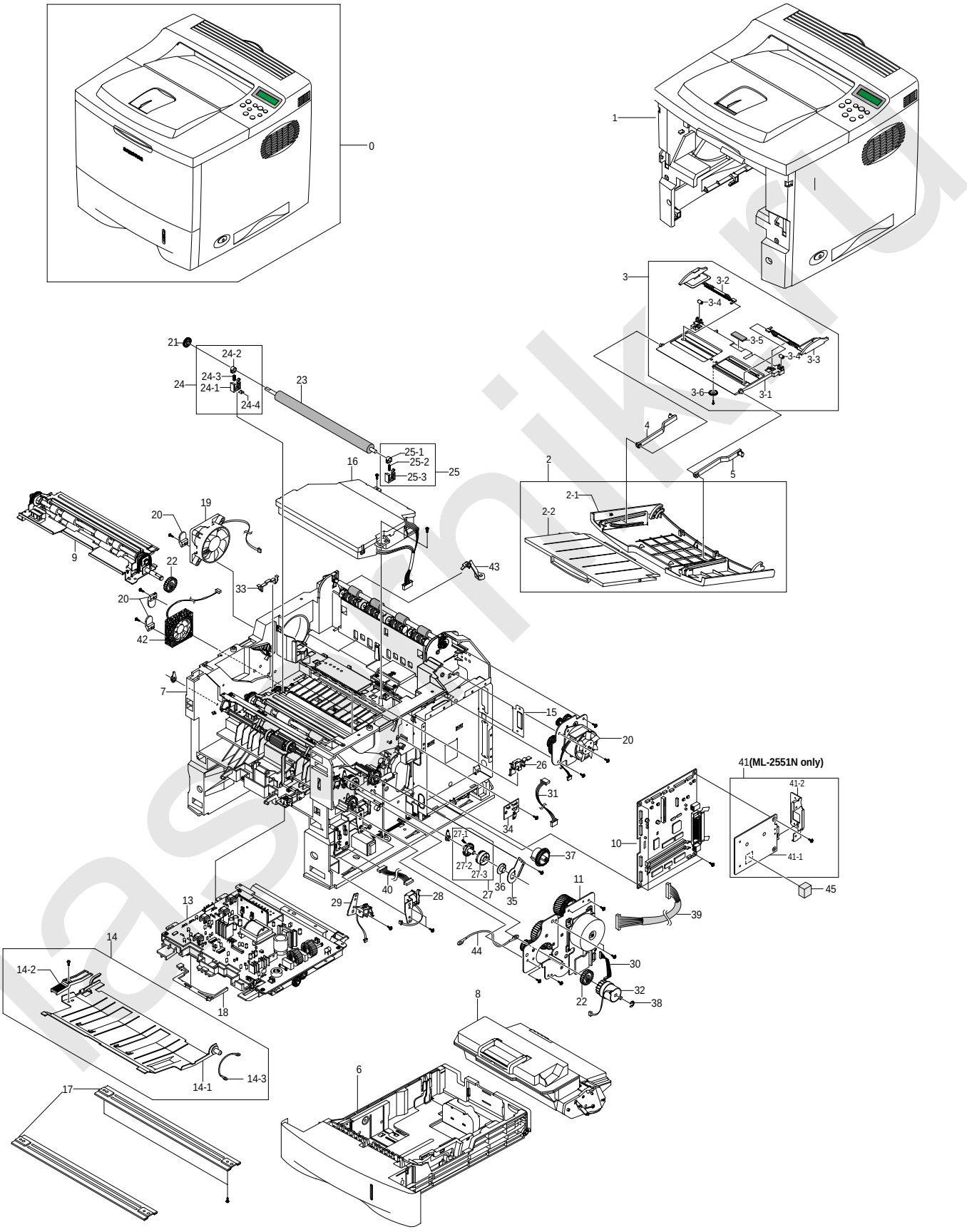

Main Assembly Parts List(1/2)

SA : Service Available
O : Service available **X** : Service not available

No.	Location	Description	SEC.Code	Q'ty	SA	Remark
1	H6001	ELA HOU BASE-HOUSING ; SEC,KOR,22	JC96-02695S	1	X	ML-2550
		ELA HOU BASE-HOUSING ; SEC,KOR,22	JC96-02695X	1	X	ML-2551N
		ELA HOU BASE-HOUSING ; SEC,KOR,22	JC96-02993F	1	X	ML-2555G
2	Z2293	ELA UNIT-COVER MP ; ML-2060A,SEC,220V	JC96-02679A	1	O	
2-1	Z2204	COVER-M-MP ; ML-2060,ABS,V0,SEC	JC63-00127A	1	O	
2-2	T4136	TRAY-M-EXTEND MP ; ML-2060,ABS	JC63-00128A	1	O	
3	K3145	ELA UNIT-KNOCKUP MP ; ML-2060A,SEC,220V	JC96-02680A	1	O	
3-1	P5146	PLATE-M-KNOCK UP MP ; ML-2060,ABS	JC61-00686A	1	O	
3-2	G2299	PMO-SIDE GUIDE MP(L) ; ML-2060,PC+ABS	JC72-01005A	1	O	
3-3	G2301	PMO-SIDE GUIDE MP(R) ; ML-2060,PC+ABS	JC72-01006A	1	O	
3-4	K5006	PMO-IDLE KNOCK UP MP ; ML-2060,POM,WHITE	JC72-01004A	2	O	
3-5	P0019	MPR-PAD KNOCK UP MP ; ML-6060A,CR+CORK	JC74-00011A	1	X	
3-6	G0369	GEAR-PINION ; SF4000,POM,WHT,M1,Z16	JG66-40003A	1	O	
4	T4137	TRAY-M-LINK MP(L) ; ML-2060,HIPS	JC63-00129A	1	O	
5	T4138	TRAY-M-LINK MP(R) ; ML-2060,HIPS	JC63-00130A	1	O	
6	K3096	ELA UNIT-CASSETTE(550) ; ML-2150,SEC	JC96-02845B	1	O	
7	B0075	ELA UNIT-FRAME BASE ; ML-2550,SEC,220V	JC96-02627G	1	O	⚠ 220V
8	T2060	ELA UNIT-DEVE KIT ; ML-2550,SAMSUNG	JC96-02639J	1	O	5K
9	K3171	ELA UNIT-REGI ; ML-2060A,SEC,220V	JC96-02626A	1	O	
10	Z1024	PBA MAIN-CONTROLLER	JC92-01658D	1	O	ML-2550/ML-2550S ML-2551N ML-2551NS
		PBA MAIN-CONTROLLER	JC92-01658C	1	O	ML-2555G
11	M2098	ELA UNIT-MOTOR MAIN CAR 25 ; ML-2550,XEROX	JC96-02725B	1	O	
12	M2097	ELA UNIT-MOTOR EXIT CARDINAL2 ; ML-2550,XE	JC96-02857A	1	O	
13	S7016	ELA HOU-SMPS_HVPS_V2(220V) ; ML-2550,SEC	JC96-02777B	1	X	⚠ 220V
14	K3567	MEA UNIT-GUIDE FRONT, DUP ; ML-2150,SEC	JC97-01715A	1	O	
14-1	G2085	GUIDE-P-FRONT, DUP ; ML-2060,SECC,0.8,76	JC61-00660A	1	O	
14-2	L4035	LEVER-M-OPEN, DUP ; ML-2060,PC,2.5,12,40	JC66-00443A	1	O	
14-3	H1067	CBF HARNESS-EARTH (TX MOTOR) ; SF-3100,CBF	JC39-00017A	1	O	None N/W Card
15	D2001	BRACKET-P-BLADE ; ML-2060,SECC,1.2,20,230	JC61-00634A	1	X	ML-2550 Only
16	L7044	UNIT-LSU_CARDINAL_25 ; ML-2550,600DPI	JC59-00019B	1	O	
17	K2861	BAR-P_CROSS BOTTOM ; ML-2060,SECC T1	JC71-00042A	2	O	
18	K3816	PMO-ACTUATOR EMPTY ; ML-2060,PC,BLK	JC72-00991A	1	O	
19	F5016	FAN-DC CARDINAL ; AD0424LS-C50	JC31-00029A	1	O	
20	F5029	STOPPER-M-FAN80 ; ML-2060,ABS,BLK	JC61-00667A	3	O	
21	G0439	GEAR-TR29 ; ML-6060A,POM,BLK,0.6,29	JC66-00039A	1	O	
22	G0415	GEAR-REGI Z25 ; ML-2060,M90-44,0.8,25,5.6	JC66-00420A	2	O	
23	Z3014	ROLLER-TRANSFER ; ML-2060,NBR SPONGE+SUM/N	JC66-00540A	1	O	
24	K3139	ELA UNIT-HOLDER TR R ; ML-6060A,SAMSUNG	JC96-01729A	1	O	
24-1	K3741	PMO-TRANSFER HOLDER R ; ML-6060A,ABS,PANTO	JC72-41145C	1	X	
24-2	K3852	PMO-BUSHING TR ; ML-5000A,POM,BLK	JC72-41142A	1	X	
24-3	Z4278	SPRING-TR R HAWK ; ML-6060A,SUS 304 WPB	JC61-00046A	1	X	
24-4	K3379	IPR-PLATE TR ; ML-5000A,BSBM1/2H,T0.2	JC70-11053A	1	X	

Main Assembly Parts List(2/2)

SA : Service Available
O : Service available **X** : Service not available

No.	Location	Description	SEC.Code	Q'ty	SA	Remark
25	K3138	ELA UNIT-HOLDER TR L ; ML-6060A,SAMSUNG	JC96-01730A	1	O	
25-1	K3852	PMO-BUSHING TR ; ML-5000A,POM,BLK	JC72-41142A	1	X	
25-2	K4278	SPRING-TR R HAWK ; ML-6060A,SUS 304 WPB	JC61-00046A	1	X	
25-3	K3741	PMO-TRANSFER HOLDER L ; ML-6060A,ABS,GRAY	JC72-41145C	1	X	
26	C1013	CAP-M-GEAR ; ML-2060,POM,BLK	JC67-00039A	1	O	
27	G0467	MEA UNIT-GEAR P/UP MP CARDINA ; ML-2150	JC97-01738A	1	O	
27-1	Z4145	SPRING--CAM MP ; ML-6100,SUS304-WPB,2.4,0	JC61-00003A	1	O	
27-2	P2055	GEAR-MP PICK_UP ; ML-2060,M90-44,0.8,37,20	JC66-00423A	1	O	
27-3	H4008	GEAR-MP HOLDER_CAM ;ML-2060,M90-44,0.8,37	JC66-00424A	1	O	
28	S8014	SOLENOID-MAIN ; DLH-34L008-05,ML-2150,24V	JC33-00012A	1	O	
29	S8015	SOLENOID-MP ; DLH-34L008-04,ML-2150,24V,8O	JC33-00013A	1	O	
30	M2052	CBF HARNESS-MAIN MOTOR ; ML-2150,CBF,UL 10	JC39-00257A	1	O	
31	M2053	CBF HARNESS-MOTOR ; ML-1650,WIRE HARNESS	JC39-00157A	1	O	
32	C9048	MEP-CLUTCH FEED CARDINAL ; ML-2150,4.0W	JC47-00009A	1	O	
33	C1078	PMO-CAP TR ; ML-5000A,PC,BLK	JC72-41292A	1	O	
34	M0308	PBA SUB-COVER JOINT ; ML-2150,SEC,KOREA	JC92-01510A	1	O	
35	S4013	BRACKET-P-SHAFT MP ; ML-2060,SECC,1.2	JC61-00755A	1	O	
36	P2038	BEARING-PICK UP ; ML-80,POM	JC66-10202A	1	O	
37	P2056	GEAR-PICK_UP CAM ; ML-2060,M90-44,0.8,29	JC66-00533A	1	O	
39	H1247	CBF HARNESS-SMPS ; ML-2150,CBF,UL 1061,24P	JC39-00253A	1	O	
40	H1172	CBF HARNESS-MPF JOINT ; ML-3550,UL1061AWG2	JC39-00205A	1	O	
41	K3007	ELA HOU-NPC3_VE ; ML-2551N,SAMSUNG,NPC	JC96-03393A	1	O	ML-2551N Only
41-1	N0000	BRACKET-NPC ; MLC-500,SCEE,T0.8	JC61-00809A	1	X	
41-2	M0233	PBA SUB-NPC3_VE ; ML-2550,XEROX, SAMSUNG	JC92-01676A	1	X	
42	F5017	FAN-DC CARDINAL ; AD0424LS-C50,ML-2550	JC31-00027B	1	O	
43	K3819	PMO-ACTUATOR OUTFULL ; ML-2150,ABS,BLK	JC72-01310A	1	O	
44	L5014	CBF HARNESS-OPE ; SF3000,CBF,UL1007,100	JB39-40532A	1	O	
45	K4265	STOPPER-M_NETWORK ; ML-2550,PP,18,BLK	JC61-00837A	1	O	
46	K2897	CBF-INTERFACE-USB ; ML-6100,-,UL,1800	JC39-00001A	1	O	
47	Z6060	CBF-POWER CORD,2000M ; 250V 7A,MSP-48E,BLK	JC39-10002A	1	O	

lasernik.ru

8.2 Base-Houshing Assembly

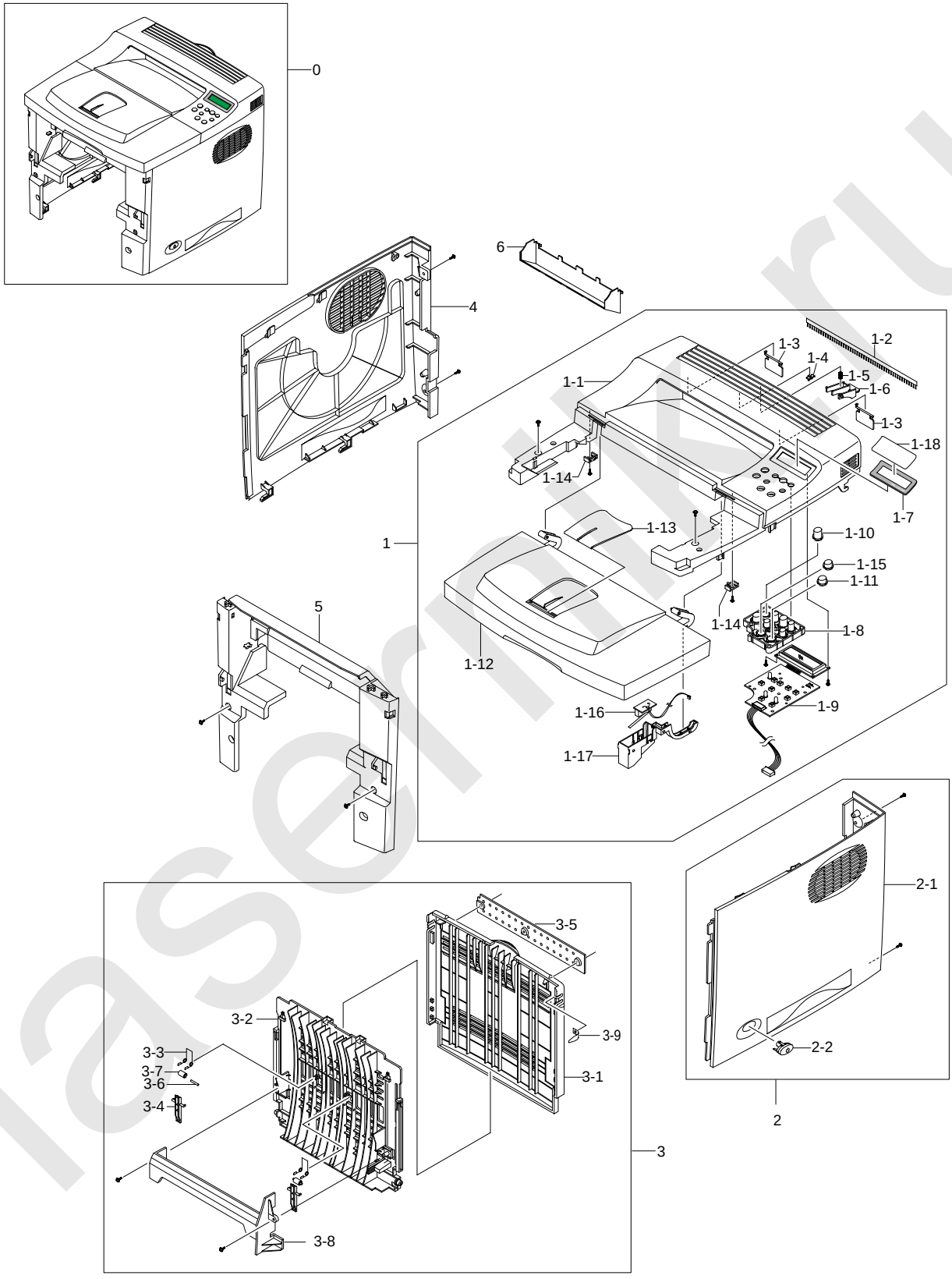

laserinfo.ru

Base-Houshing Assembly Parts List

SA : Service Available
O : Service available **X** : Service not available

No.	Location	Description	SEC.Code	Q'ty	SA	Remark
0	H6001	ELA HOU BASE-HOUSING ; SEC,KOR,22	JC96-02695S	1	X	ML-2550
		ELA HOU BASE-HOUSING ; SEC,KOR,22	JC96-02695X	1	X	ML-2551N
		ELA HOU BASE-HOUSING ; SEC,KOR,22	JC96-02993F	1	X	ML-2555G
1	Z2299	ELA UNIT-COVER TOP ; SEC,KOR,220V	JC96-02696T	1	O	ML-2550
		ELA UNIT-COVER TOP ; SEC,KOR,220V	JC96-02696X	1	O	ML-2551N
		ELA UNIT-COVER TOP ; SEC,KOR,220V	JC96-02696F	1	O	ML-2555G
1-1	Z2168	COVER-M_TOP ; ML-2551N,ABS ,2.5,V0,KOR	JC63-00119R	1	O	ML-2550
		COVER-M_TOP ; ML-2551N,ABS ,2.5,V0,KOR	JC63-00119W	1	O	ML-2551N
		COVER-M_TOP ; ML-2551N,ABS ,2.5,V0,KOR	JC63-00361F	1	O	ML-2555G
1-2	B5010	MEC- BRUSH ANTISTATIC ; ML-6060A,SEC,NTR	JC75-00095A	1	O	
1-3	L4034	LEVER-M_STACKING 25 ; ML-2550,PCABS,0.2,24	JC66-00646B	2	O	
1-4	K2882	BUSH-M-RETAINER ; ML-2060,POM	JC61-00657A	1	O	
1-5	Z4169	SPRING ETC-DUPLEX COVER ; ML-9400W,SUS304W	JC61-00391A	1	O	
1-6	L6053	PMO-STACKER LOCKER ; ML-2060,ABS,0810	JC72-00995A	1	O	
1-7	K4284	WINDOW-M-LCD ; ML-2060,ACRYL,TRANS	JC64-00048A	1	O	
1-8	K0033	KEY-M-BUTTON ; ML-2060,ABS	JC64-00045A	1	O	
1-9	K2377	PBA MAIN-LCD PANEL ; ML-2150,SEC,KOREA,LCD	JC92-01473A	1	X	
1-10	K0037	KEY-M-DUPLEX ; ML-2060,ACRYL,NATURAL	JC64-00044A	1	O	
1-11	K0045	KEY-M-ON LINE ; ML-2060,ACRYL,NATURAL	JC64-00046A	1	O	
1-12	Z2213	COVER-M-OPEN ; ML-2060,ABS,V0	JC63-00116A	1	O	
1-13	S5090	PMO-STACKER_RX ; ML-2150,ABS,LIGHT GRAY	JC72-00973B	1	O	
1-14	H3073	STOPPER-M-HINGE OPEN ; ML-2060,ABS	JC61-00656A	2	O	
1-15	K0049	KEY-M-SAVE MODE ; ML-2060,ACRYL,NATURA	JC64-00047A	1	O	
1-16	Z2496	PBA SUB-COVER OPEN ; ML-2150,SEC,KOREA	JC92-01514A	1	O	
1-17	S3037	CAP-M-SENSOR ; ML-2060,ABS,2.5	JC67-00034A	1	X	
1-18	Z2247	COVER-WINDOW ; ML-2150,PVC FILM,T0.15,78MM	JC63-00256A	1	X	
2	Z2298	ELA UNIT-COVER RIGHT ; ML-2060,SEC,220V	JC96-02697A	1	O	
2-1	Z2224	COVER-M-RIGHT ; ML-2060,ABS	JC63-00115A	1	O	
2-2	B3006	BUTTON-M-POWER ; ML-2060,ABS,V0	JC64-00043A	1	O	
3	Z2421	MEA UNIT-COVER REAR ; ML-2150,SEC,USA	JC97-01743A	1	O	
3-1	Z2220	COVER-M-REAR ; ML-2060,ABS,V0	JC63-00120A	1	O	
3-2	Z5062	PMO-STACKER REAR ; ML-2060,ABS,0810P	JC72-00996A	1	O	
3-3	F6217	SPRING-TS ; SWRS 82A,-,PI0.8,D11.5,-,N11.5	6107-001157	2	O	
3-4	G2059	GUIDE-M-DUPLEX ; ML-2060,PC,BLK	JC61-00658A	2	O	
3-5	K3247	ICT-BRKT REAR COVER ; ML-7000,SPCC,T1.2,ZN	JC70-00007A	1	X	
3-6	S4049	IEX-SHAFT IDLE,F/UP ; ML-5000A,SUS304	JC70-20901A	2	O	
3-7	K3804	PEX-ROLLER F/UP(2) ; ML-5000A,TE	JC72-20902A	2	O	
3-8	D2086	PMO-DUMMY FRAME FUSER ; ML-2060,PET G/F20%	JC72-00999A	1	O	
3-9	E1008	IPR-TENSION PLATE ; ML-2150,SUS304,T0.25	JC70-00465A	1	X	
4	Z2196	COVER-M-LEFT ; ML-2060,ABS,V0	JC63-00117A	1	O	
5	Z2191	COVER-M-FRONT INNER ; ML-2060,ABS,VO	JC63-00118A	1	O	
6	Z2189	COVER-M-FRAME EXIT ; ML-2060,ABS,2.5	JC63-00122A	1	O	

Internal Use Only

8.3 Frame Assembly (1)

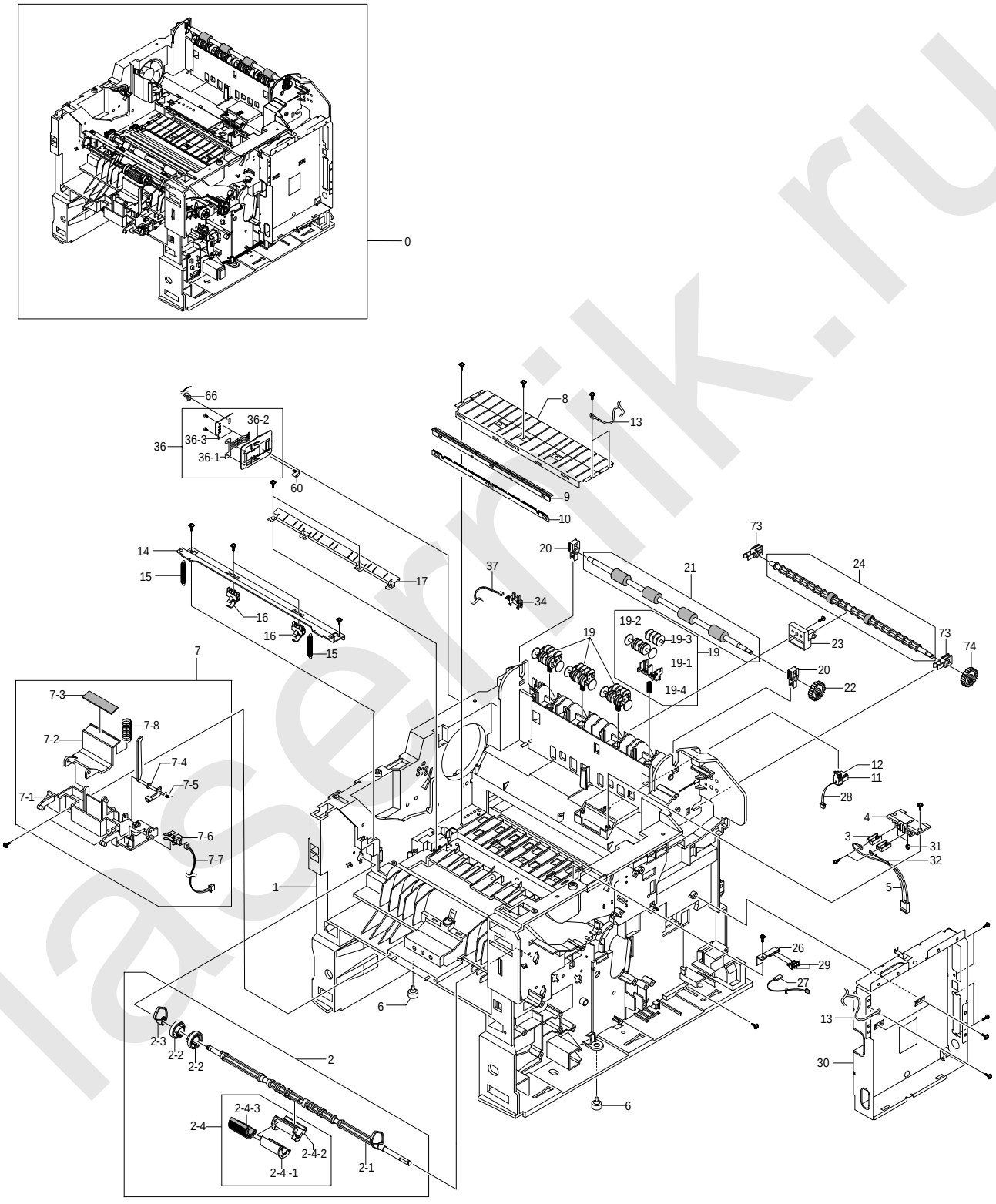

laserrik.ru

Frame Assembly (2)

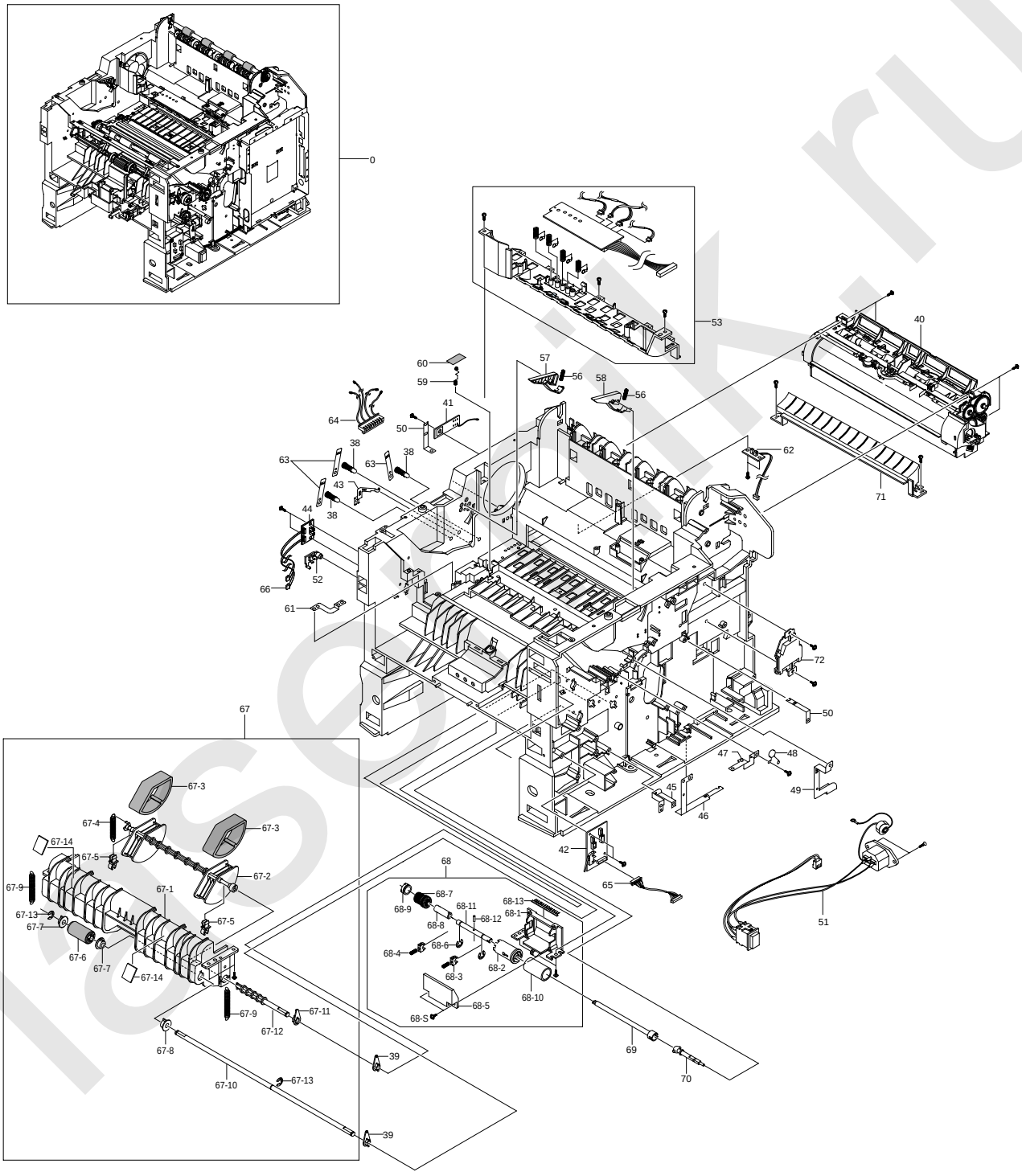

laserfix.ru

Frame Assembly Parts List(1/3)

SA : Service Available
O : Service available **X** : Service not available

No.	Location	Description	SEC.Code	Q'ty	SA	Remark
0	B0075	ELA UNIT-FRAME BASE ; ML-2550,SEC,220V	JC96-02627G	1	O	⚠ 220V
1	B0080	FRAME-M-BASE ; ML-2060,ABS,BLK	JC61-00677A	1	O	
2	P2052	ELA UNIT-PICKUP MP ; ML-2060,SEC,220V	JC96-02681A	1	O	
2-1	P2153	SHAFT-M-PICK UP MP ; ML-2060,PC	JC66-00453A	1	O	
2-2	P2131	PMO-IDLE PICK UP MP ; ML-2060,POM,WHITE	JC72-01003A	2	O	
2-3	P2041	CAM-M-PICK UP MP ; ML-2060,POM,NTR	JC66-00452A	1	O	
2-4	K3174	ELA UNIT-ROLLER P/UP MP ; ML-2060,SEC,220V	JC96-02686A	1	O	
2-4-1	P2062	HOLDER-M-PICKUP MP ; ML-2060,ABS,BLK	JC61-00705A	1	O	
2-4-2	P2064	HOUSING-M-PICK UP MP ; ML-2060,ABS,B	JC61-00685A	1	O	
2-4-3	P2148	RUBBER-PICK UP MP ; ML-2060,NBB,GRAY	JC73-00131A	1	X	
3	K3422	IPR-TERMINAL FU ; ML-165,C5210P,T0.3	JC70-10961A	2	O	
4	H6086	PMO-HOUSING TERMINAL ; ML-165,ABS GF20%,BL	JC72-41010A	1	O	
5	H1085	CBF HARNESS-FUSER ; ML-2150,CBF,UL 3122,2P	JC39-00279A	1	O	
6	F1017	COM,FOOT-RUBBER ; CR70,BLK	JC61-40001A	2	O	
7	P0006	ELA HOU BASE-HOLDER PAD ; ML-2060,SEC,110V	JC96-02675A	1	O	
7-1	P0008	FRAME-M-HOLDER PAD ; ML-2060,ABS,-,HB,BLAC	JC61-00683A	1	O	
7-2	H4029	HOLDER-M-PAD ; ML-2060,ABS,BLK	JC61-00684A	1	O	
7-3	P0034	RPR-FRICTION PAD MP ; ML-2060,NBB,54*10*T1	JC73-00132A	1	O	
7-4	K3818	PMO-ACTUATOR MP ; ML-2060,PC,BLK	JC72-01002A	1	O	
7-5	Z4247	SPRING ETC-REMAIN ; ML-9400W,SUS304WPB,0.4	JC61-00414A	1	O	
7-6	K2483	PHOTO-INTERRUPTER ; TR,-,200mW,DIP-4,ST	0604-001095	1	O	
7-7	H1168	CBF HARNESS-MP EMPTY ; ML-2150,CBF,UL 1061	JC39-00256A	1	O	
7-8	Z4226	SPRING ETC-PAD ; ML-9400W,SUS304WPB,7.55	JC61-00387A	1	O	
8	G2083	GUIDE-P_TRANSFER ; ML-2060,SECC,0.6	JC61-00678A	1	O	
9	K3376	PMO-HOLDER PLATE SAW ; ML-6060A,-,PC,WHT	JC72-40247B	1	X	
10	K3377	IPR-PLATE SAW 2150 ; ML-2150,SUS304CSP	JC70-10232C	1	X	
11	Z0013	PMO-CAP CONNECTOR L ; ML-6060A,PC,VO	JC72-00463A	1	O	
12	Z0014	PMO-CAP CONNECTOR U ; ML-6060A,PC,VO	JC72-00465A	1	O	
13	L5014	CBF HARNESS-OPE ; SF3000,CBF,UL1007,100	JB39-40532A	1	O	
14	G2082	GUIDE-P_REGI UPPER ; ML-2060,SECC,1.2	JC61-00675A	1	O	
15	L4002	SPRING LEVER ; ML-165,SUS304 WPB,PIO.5,D4	JC61-70918A	2	O	
16	H4023	HOLDER-M-BUSHING TX ; ML-2060,POM,BL	JC61-00671A	2	O	
17	G2091	GUIDE-PLATE PAPER ; ML-2060,SECC,T0.6	JC61-00691A	1	O	
19	E4060	MEA RACK-EXIT ROLLER ; ML-1605,SUMSUNG,KOR	JC97-01034A	4	O	
19-1	E4126	PMO-HOLDER EXIT ROLL ; ML-165,PC,BLK,HB	JC72-41006A	1	O	
19-2	K4063	PMO-ROLLER FD F ; ML-165,POM,BLK,HB	JC72-41007A	1	O	
19-3	K4064	PMO-ROLLER FD R ; ML-165,POM,BLK,HB	JC72-41008A	1	O	
19-4	E7004	SPRING-EXIT ROLL FD ; ML-165,SUS304 WPB,PI	JC61-70911A	1	O	
20	H4009	HOLDER-BEARING EXIT/DOWN ; SCX-4216F	JC61-00829A	2	O	
21	E4159	ROLLER-EXIT_F/DOWN ; ML-2150,EPDM	JC66-00668A	1	O	
22	E4041	GEAR-EXIT ; ML-80,POM,BLK	JC66-40209A	1	O	
23	H4022	HOLDER-M-BUSHING EXIT ; ML-2060,POM	JC61-00673A	1	O	

Frame Assembly Parts List(2/3)

SA : Service Available
O : Service available **X** : Service not available

No.	Location	Description	SEC.Code	Q'ty	SA	Remark
24	E4156	RMO-RUBBER EXIT_DUP; ML-2150,EPDM	JC73-40915B	1	O	
25	K3425	IPR-TERMINAL TR HAWK ; ML-6060A,SUS301,T0	JC70-00132A	1	X	
26	C1015	CAP-M-WIRE PTL LOWER ; ML-2060,POM	JC67-00036A	1	O	
27	M0411	PBA SUB-PTL2 ; ML-2150,SEC,KOREA,PTL2	JC92-01516A	1	O	
28	H1267	CBF HARNESS-THRMISTOR ; ML-2150,CBF,UL 106	JC39-00255A	1	O	
29	K4276	TERMINAL-P_PTL ; SUS,T0.2	JC65-00001A	2	O	
30	Z1040	SHIELD-P_CONTROLLER ; ML-2060,SECC,0.8	JC63-00124A	1	O	
31	N1000	NUT-HEX ; 2C,M3,ZPC(YEL),SM20C	6021-000222	2	X	
32	K2756	CABLE_TIE ; DA-80,NONE,T1,W2.5,L80,NTR,NYL	6501-000004	1	X	
34	K2483	PHOTO-INTERRUPTER ; TR,-,200mW,DIP-4,ST	0604-001095	1	O	
36	S3002	ELA HOU-CST SENSOR HAWK16 ; ML-7250,XEROX	JC96-02127A	1	O	
36-1	S3058	IPR-PLATE SENSOR ; ML-7250,SUS301,-,0.2T	JC70-00192A	1	O	
36-2	S3055	BRACKET-SENSOR ; ML-7250,SECC,1.0T	JC70-00195A	1	O	
36-3	M0301	PBA SUB-CASSETTE ; ML-1650,KOREA/EXPORT	JC92-01336A	1	X	
37	H1013	CBF-HARNESS ; ML-80,JUMPER,AWG22,52mm,SILV	JC39-40511A	1	X	
38	K3638	MEA UNIT-TERMINAL:TR ; ML-5000A,SAMSUNG,KO	JC97-01401A	3	O	
39	S4068	PMO-BEARING SHAFT ; ML-2150,POM,BLK,-,DE89	JC72-41191B	5	O	
40	F4068	ELA UNIT-FUSER_25 ; ML-2550,XEROX,USA,220V	JC96-02693D	1	O	⚠ 220V
41	M0442	PBA MAIN-ZENER ; ML-2150,SEC,KOREA,ZENER B	JC92-01488A	1	X	
42	Z0012	PBA SUB-CONNECTOR B'D ; ML-2550,SEC,KOREA	JC92-01530A	1	O	
43	O0020	IPR-P_GROUND OPC;ML-2060,SUS,0.2	JC70-00332A	1	O	
44	M0326	PBA SUB-EMPTY SENSOR ; ML-2150,SEC,KOREA	JC92-01511A	1	O	
45	F6097	IPR-P_GND SOLENOIDE FEED ; ML-2060,SUS	JC70-00336A	1	O	
46	S1052	IPR-P_GROUND SCF MAIN ; ML-2060,SUS,0.2	JC70-00334A	1	O	
47	K3366	IPR-P_GROUND REGI ROLLER ; ML-2060,SUS	JC70-00333A	1	O	
48	K3053	ELA HOU-VARISTOR ; ML-6060,NEC/SEC,110/220	JC96-01772A	1	O	
49	M2124	IPR-P_GROUND MOTOR MAIN2 ; ML-2060,SUS	JC70-00330A	1	O	
50	G2130	IPR-P_GROUND GUIDE TR ; ML-2060,SUS,0.2	JC70-00328A	2	O	
51	H1104	CBF HARNESS-INLET ; ML-2150,CBF,UL 1617	JC39-00246A	1	O	
52	G2096	HINGE-M-FRONT GUIDE, DUP ; ML-2060,POM, HB	JC61-00666A	1	O	
53	L7015	FRAME-M-LSU LOWER ; ML-2060,ABS,BLK	JC61-00676A	1	O	
56	Z4188	SPRING-GUIDE DEVE ; ML-5000A,SUS304 WPB,PI	JC61-70932A	2	O	
57	T2158	PMO-GUIDE DEVE L ; ML-6060A,ABS,BLACK,V0	JC72-00317A	1	O	
58	T2159	PMO-GUIDE DEVE R ; ML-6060A,ABS,BLACK,V0	JC72-00318A	1	O	
59	K4277	TERMINAL-P_TR CARDINAL ; SUS,T0.2	JC65-00005A	1	O	
60	K3319	IPR-GND-P-PAPER_SIZE ; ML-2550,SUS,0.2	JC70-00467A	1	O	
61	P5064	IPR-P_GROUND PLATE PAPER ; ML-2060,SUS	JC70-00339A	1	O	
62	M0330	PBA SUB-EXIT SENSOR ; ML-2150,SEC,KOREA,EX	JC92-01512A	1	O	
63	K4272	TERMINAL-P_HV CARDINAL ; SUS,T0.2	JC65-00006A	3	O	

Frame Assembly Parts List(3/3)

SA : Service Available
O : Service available **X** : Service not available

No.	Location	Description	SEC.Code	Q'ty	SA	Remark
64	H1098	CBF HARNESS-HVPS ; ML-2150,CBF,UL 1007,4PI	JC39-00247A	1	O	
65	Z0004	CBF HARNESS-CONNECTOR ; ML-2150,CBF,UL 106	JC39-00259A	1	O	
66	H1242	CBF HARNESS-SENSOR ; ML-2150,CBF,UL 1061,4	JC39-00261A	1	O	
67	P2051	ELA UNIT-PICK UP ; ML-2060,SEC,220V	JC96-02683A	1	O	
67-1	P2054	FRAME-M-PICKUP ; ML-2060,PC,BLACK	JC61-00641A	1	O	
67-2	P2068	HOUSING-M-PICKUP ; ML-2060,ABS,BLK	JC61-00636A	1	O	
67-3	P2148	RUBBER-PICK UP ; ML-2060,PNR,30,GRAY	JC73-00127A	2	O	
67-4	E5025	SPRING-EXTENSION ; ML-5000A,SUS304WPB,PI0	JC61-70950A	1	O	
67-5	F6161	PMO-BUSHING FEED ; ML-1710,DELRIN8903,WHIT	JC72-00382B	2	O	
67-6	F6089	HOUSING-M-FEED ; ML-2060,ABS,BLK,V0	JC61-00637A	1	O	
67-7	F6207	RUBBER-FEED ; ML-2060,PNR,30,GRAY,SE	JC73-00128A	1	X	
67-8	P2038	BEARING-PICK UP ; ML-80,POM	JC66-10202A	3	O	
67-9	Z4203	SPRING-KNOCK UP MP ; ML-165,SUS304 WPB,PI0	JC61-70913A	2	O	
67-10	F6208	SHAFT-FEED, DUP ; ML-2060,SUM24L,61,4.0	JC66-00445A	1	X	
67-11	S4068	PMO-BEARING SHAFT ; ML-2150,POM,BLK,DE89	JC72-41191B	1	O	
67-12	P2153	SHAFT-M-PICK UP MP ; ML-2060,PC	JC66-00453A	1	O	
67-14	P2161	SHEET-COVER PICKUP ; ML-2550,PVC,T0.2	JC63-00293A	2	O	
68	K3172	ELA UNIT-RETARD ; ML-2060,SEC,220V	JC96-02682A	1	O	
68-1	F2120	FRAME-M-RETARD ; ML-2060,PC,BLACK	JC61-00640A	1	O	
68-2	H6035	HOUSING-M-RETARD ; ML-2060,ABS,BLK	JC61-00635A	1	O	
68-3	K2883	BUSH-M-RETARD ; ML-2060,POM(M90-44)	JC61-00652A	2	O	
68-4	Z4226	SPRING ETC-PAD ; ML-9400W,SUS304WPB,7.55	JC61-00387A	2	O	
68-5	H4033	HOLDER-M-RETARD ; ML-2060,ABS,BLK,V0	JC61-00638A	1	O	
68-7	K2701	SPRING-TS ; SUS304,PI0.45,D3.85,L20,W1	6107-001159	1	O	
68-8	K4020	PMO-HUB IN RETARD ; ML-2060,POM,BLK,M90	JC72-00994A	1	O	
68-9	K4021	PMO-HUB OUT RETARD ; ML-2060,POM,BLK,M90	JC72-00993A	1	O	
68-10	K4024	RUBBER-RETARD ; ML-2060,PNR,30,GRAY	JC73-00129A	1	X	
68-11	S4130	SHAFT-RETARD ; ML-2060,SUM 24L,60	JC66-00590A	1	O	
68-12	S4107	SHAFT-HUB IN ; ML-2060,SUM 24L,10,2	JC66-00591A	1	O	
68-13	B5010	MEC- BRUSH ANTISTATIC ; ML-6060A,SEC,NTR	JC75-00095A	1	O	
69	S4116	SHAFT-M-COUPLING RETARD ; ML-2060,PC+GF20%	JC66-00439A	1	O	
70	S4120	SHAFT-M-GEAR RETARD ; ML-2060,PC+GF20%	JC66-00438A	1	O	
71	G2048	GUIDE-M_FRONT ; ML-2150,PET+GF30%+MD	JC61-00801A	1	O	
72	F2122	FRAME-P-FUSER ; ML-2060,SECC T1.2	JC61-00621A	1	X	
73	T2017	BUSH-M-EXIT ; ML-2550,POM,7,7,WHITE	JC61-00845A	2	X	
74	G0331	GEAR-M-EXIT Z17 ; ML-2550,M90-44,1.0,17	JC66-00674A	1	O	

8.4 Fuser Assembly

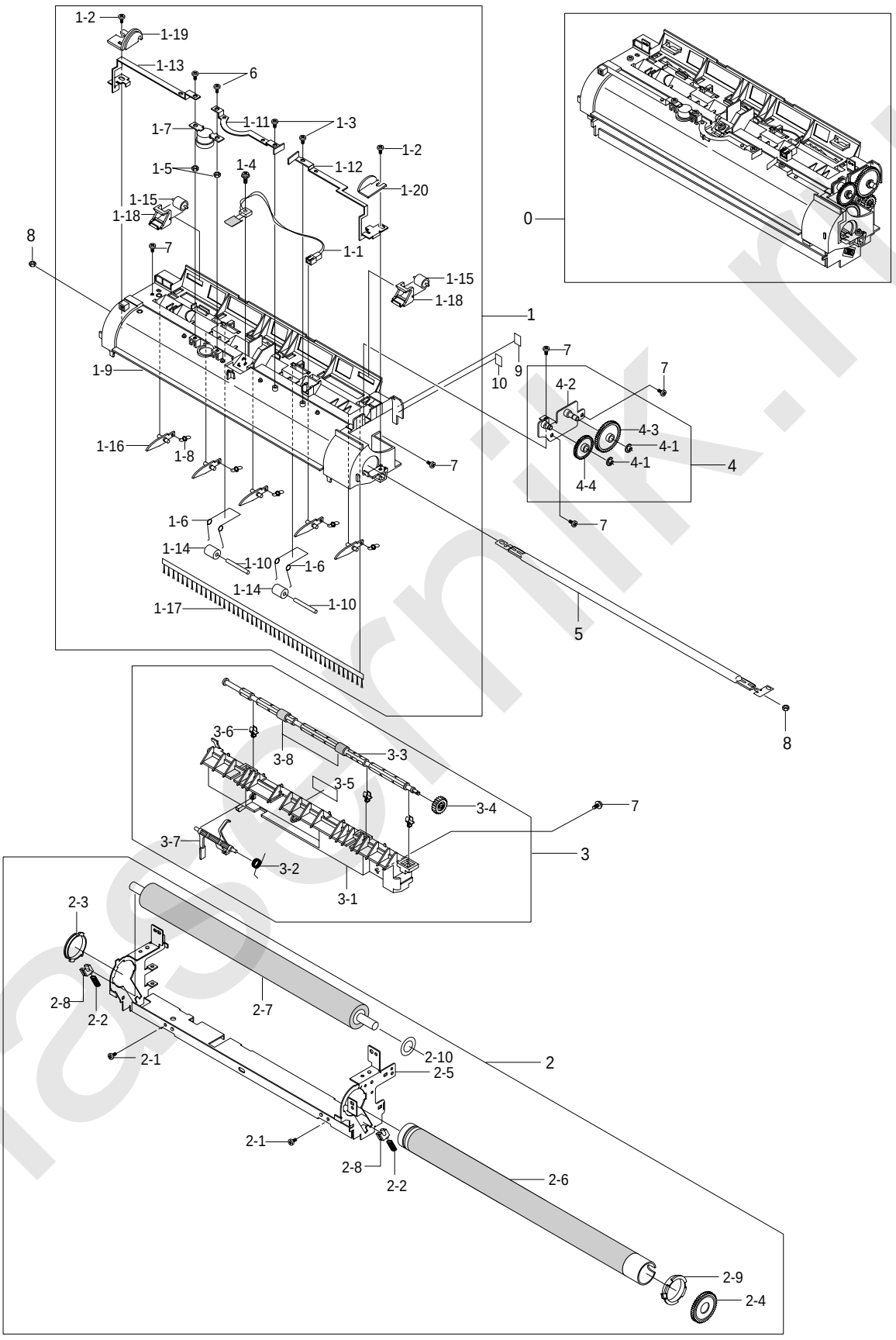

Fuser Unit Assembly Parts List(1/2)

SA : Service Available
O : Service available **X** : Service not available

No.	Location	Description	SEC.Code	Q'ty	SA	Remark
0	F4068	ELA UNIT-FUSER_25 ; ML-2550,XEROX,USA,220V	JC96-02693D	1	O	⚠ 220V
1	W3182	ELA UNIT-UPPER FUSER ; ML-2150,SEC,USA	JC96-02694A	1	X	
1-1	F4127	THERMISTOR-NTC ; 7KOHM,-,3370K,0.3MW/C	1404-001305	1	O	
1-2	S2003	SCREW-ASSY MACH ; WSP,PH,+,M3,10,ZPC(YEL)	6006-001193	2	X	
1-3	N1000	NUT-HEX ; 2C,M3,ZPC(YEL),SM20C	6021-000222	2	O	
1-5	Z4107	SPRING-TS ; SUS304,-,PI0.6,D3.6,L22,-,W20	6107-001156	2	O	
1-7	K4279	THERMOSTAT-150 ; ML-1510,-,125/250V,15/7.5	JC47-00005A	1	O	
1-8	Z4254	SPRING-SAPERATION ; ML-165,SUS304 WPB,PI0	JC61-70909A	5	O	
1-9	Z2194	COVER-M-FUSER ; ML-2060,PET+GF30%+MD	JC63-00110A	1	O	
1-10	S4049	IEX-SHAFT IDLE,F/UP ; ML-5000A,SUS304,PI1	JC70-20901A	2	O	
1-11	E0001	ELECTRODE-P-FU_M ; ML-2060,T0.6,6,L72,C521	JC71-00039A	1	O	
1-12	E0002	ELECTRODE-P-FU_R ; ML-2060,T0.6,6,L72,C521	JC71-00040A	1	O	
1-13	E0000	ELECTRODE-P_FU_L ; ML-2060,T0.6,6,L90,C521	JC71-00041A	1	O	
1-14	K3804	PEX-ROLLER F/UP(2) ; ML-5000A,TE	JC72-20902A	2	O	
1-15	K4068	PMO-ROLLER UPPER DP ; ML-165,POM,WHT,HB	JC72-40981A	2	O	
1-16	C7003	PMO-GUIDE CLAW ; ML-165,PEEK,BLK	JC72-41012A	5	O	
1-17	B5010	MEC- BRUSH ANTISTATIC ; ML-6060A,SEC,NTR	JC75-00095A	1	O	
1-18	H4027	HOLDER-M-IDLE ROLLER;ML-2150,PC,BL	JC61-00785A	2	O	
1-19	C1015	CAP-M-FUSER_L ; ML-2550,OFL4036,T1.5,B	JC67-00056A	1	X	
1-20	C1016	CAP-M-FUSER_R ; ML-2550,OFL4036,T1.5	JC67-00057A	1	X	
2	F4020	MEA UNIT-LOWER FUSER ; ML-2150,SEC,USA	JC97-01718A	1	X	
2-2	Z4230	SPRING-PR(7300) ; ML-7300,PIANO WIRE,1.0,6	JC61-00056A	2	O	
2-3	K2881	BUSH-M-HR_R ; ML-2060,PPS,BLK	JC61-00615A	1	O	
2-4	F4084	GEAR-FUSER 7300 ; ML-7300,PPS, OFL4036,1,3	JC66-40913B	1	O	
2-5	F2122	FRAME-P-FUSER ; ML-2060,SECC T1.2	JC61-00621A	1	O	
2-6	H2010	ROLLER-HEAT ; ML-2150,AL PIPE T1.8MM,26MM	JC66-00597A	1	O	
2-7	P6014	ROLLER-PRESSURE ; ML-2150,HTV SP	JC66-00599A	1	O	
2-8	P6004	BEARING-PRESSURE/R ; ML-165,PPS,5,4.8	JC66-10901A	2	O	
2-9	B1019	BEARING-H/R L ; ML-165,PPS(RBA313),ID26.2	JC66-10902A	1	O	
2-10	K2680	SPACER-DEV ; ID6.0,OD19.6,T0.2,NTR,TEFLON	JC60-40902A	2	X	
3	K3570	MEA UNIT-GUIDE REAR ; ML-2150,SEC,USA	JC97-01719A	1	X	
3-1	G2074	GUIDE-M-REAR ; ML-2060,PET+GF30%+MD	JC61-00620A	1	O	
3-2	Z4132	SPRING-ACTUATOR ; ML-165,SWPB,P0.15,D7,L1	JC61-70903A	1	O	
3-3	S4119	SHAFT-M-EXIT_F/UP ; ML-2060,PC	JC66-00402A	1	O	
3-4	E4041	GEAR-EXIT ; ML-80,POM,BLK	JC66-40209A	1	O	
3-5	L0213	LABEL(R)-CAU_HOT_FU ; ML-5000A/XRX,PVC,40X	JC68-30928B	1	X	
3-6	B6027	PMO-BUSHING TX ; ML-6060A,POM,BLK	JC72-00382A	3	X	
3-7	E4093	PMO-ACTUATOR EXIT ; ML-2060,PC,BLK	JC72-00988A	1	O	
3-8	E4158	RMO-RUBBER EXIT_F/UP ; ML-2150,EPDM	JC73-40909B	2	X	

Fuser Unit Assembly Parts List(2/2)

SA : Service Available
O : Service available **X** : Service not available

No.	Location	Description	SEC.Code	Q'ty	SA	Remark
4	K3531	MEA UNIT-BRK GEAR FU ; ML-2150,SEC,USA	JC97-01720A	1	X	
4-2	B4024	BRACKET-P-FUSER ; ML-2060,SECC,T1.2	JC61-00617A	1	O	
4-3	G0268	GEAR-IDLE 33 ; ML-2060,M90-44,1.0,33,8,NTR	JC66-00425A	1	O	
4-4	G0269	GEAR-IDLE 23 ; ML-2060,PPS,1.0,23,8,NTR,25	JC66-00426A	1	O	
5	K2297	LAMP-HALOGEN ; 230V,900W,10X284MM	4713-001187	1	O	⚠ 220V
6	S2003	SCREW-ASSY MACH ; WSP,PH,+,M3,10,ZPC(YEL)	6006-001193	2	X	
8	N1000	NUT-HEX ; 2C,M3,ZPC(YEL),SM20C	6021-000222	2	X	
9	L0245	LABEL(R)-HV FUSER ; ML-6060,PVC,-,220V	JC68-00407A	1	X	⚠ 220V
10	L0246	LABEL(R)-FUSER TOUCH ; ML-2550,XEROX,PVC10	JC68-01139A	2	X	

laserrnik.ru

8.5 Main Driver Assembly

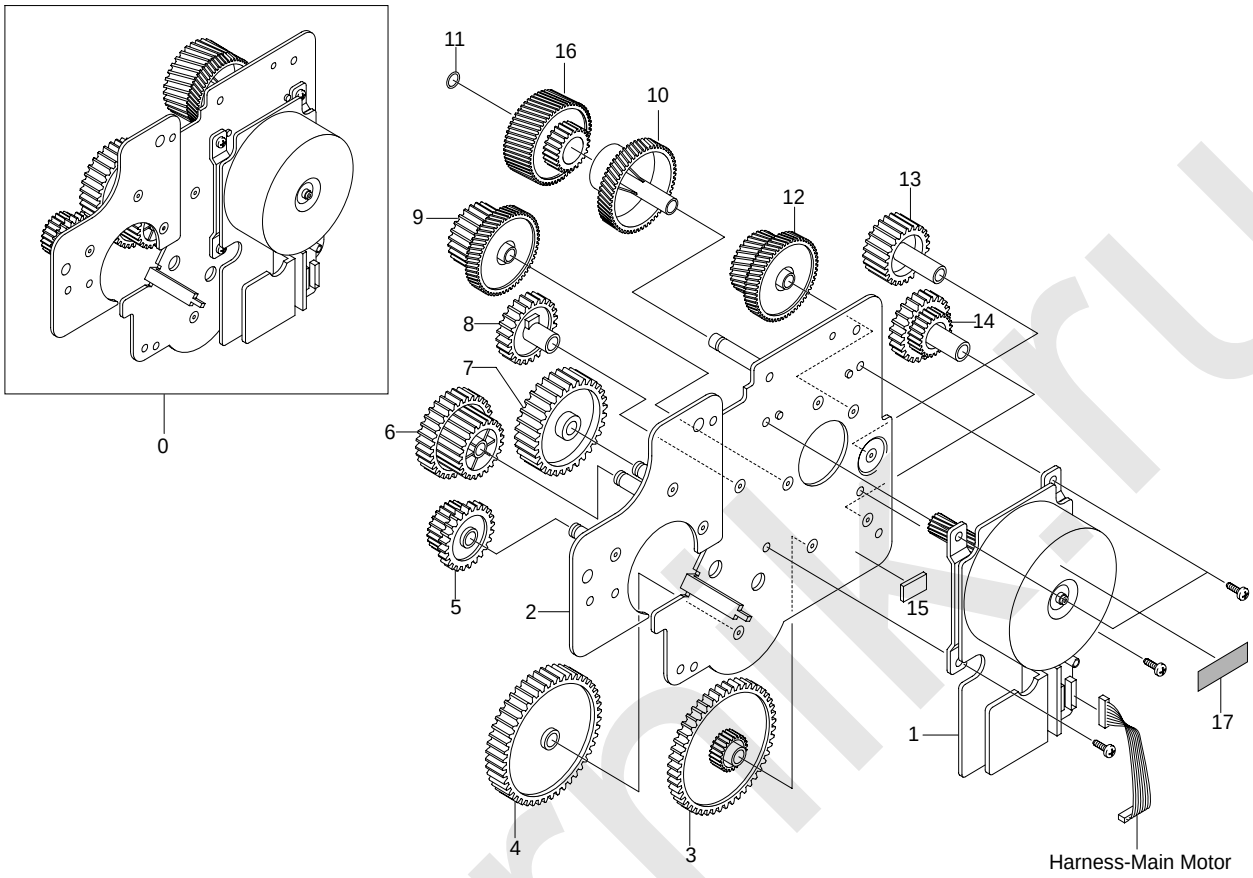

Main Driver Assembly Parts List

SA : Service Available
O : Service available X : Service not available

No.	Location	Description	SEC.Code	Q'ty	SA	Remark
0	M2098	ELA UNIT-MOTOR MAIN CAR 25 ; ML-2550,XEROX	JC96-02725B	1	O	
1	M2140	MOTOR DC-BLDC CARDINAL ; 50M8432030,1.7A	JC31-00024A	1	O	
2	B4029	BRACKET-P-MAIN ; ML-2060,SECC,1.6,163,123	JC61-00622A	1	O	
3	P2057	GEAR-RDCN PICK_UP ; ML-2060,M90-44,0.8,63	JC66-00411A	1	O	
4	P2056	GEAR-PICK_UP DRV ; ML-2060,SW-01,0.8,59,10	JC66-00412A	1	O	
5	G0400	GEAR-RDCN RETARD ; ML-2060,SW-01,0.8,27/19	JC66-00410A	1	O	
6	F6085	GEAR-RDCN FEED ; ML-2060,SW-01,0.8,33/23,1	JC66-00409A	1	O	
7	G0339	GEAR-MP DRV ; ML-2060,M90-44,0.8,45,7.5,NT	JC66-00413A	1	O	
8	G0413	GEAR-REGI IDLE ; ML-2060,M90-44,0.8,29,15E	JC66-00408A	1	O	
9	G0399	GEAR-RDCN REGI ; ML-2060,SW-01,0.5/0.8,59	JC66-00407A	1	O	
10	G0346	GEAR-OPC DRV INNER ; ML-2150,M90-44,0.5,53	JC66-00644A	1	O	
11	W0002	WASHER-PLAIN ; NYLON,CUTTING,ID5,OD9,T0.5	6031-001255	2	O	
12	O0012	GEAR-RDCN OPC ; ML-2060,M90-44,0.5,61/26,1	JC66-00405A	1	O	
13	D3019	GEAR-DUPLEX IDLE ; ML-2060,M90-44,1.0,23,3	JC66-00415A	1	O	
14	D3022	GEAR-RDCN DUPLEX ; ML-2060,SW-01,0.8/1.0,1	JC66-00414A	1	O	
15	F1017	COM,FOOT-RUBBER ; CR70,BLK	JC61-40001A	1	O	
16	G0348	GEAR-OPC DRV OUTER ; ML-2150,M90-44,0.8,31	JC66-00645A	1	O	
17	L0028	LABEL(P)-CAUTION MOTOR ; SF-5100,PVC,12*29	JC68-00261A	1	X	

8.6 Exit Driver Assembly

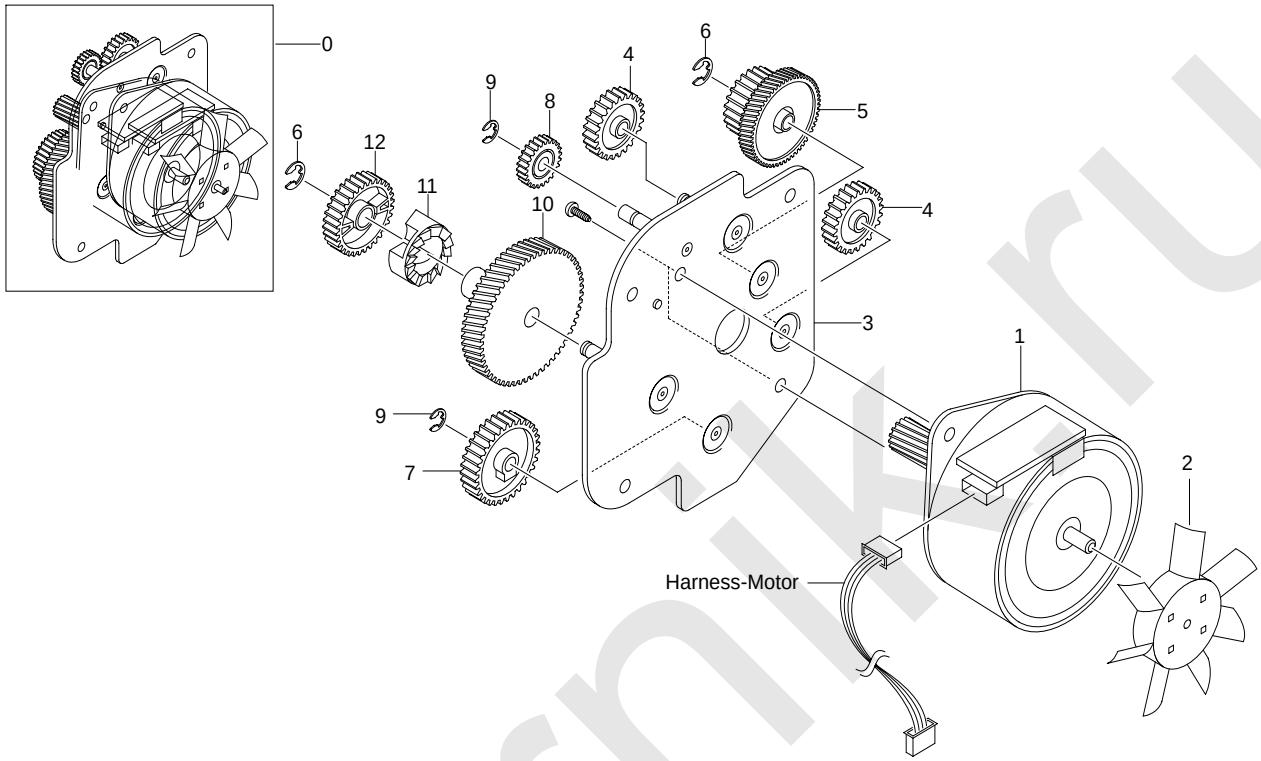

Exit Driver Unit **Parts List**

SA : Service Available
O : Service available **X** : Service not available

No.	Location	Description	SEC.Code	Q'ty	SA	Remark
0	M2097	ELA UNIT-MOTOR EXIT CARDINAL2 ; ML-2550,XE	JC96-02857A	1	O	
1	M2153	MOTOR STEP-CARDINAL 2;M49SP-2NK,ML-2550	JC31-00028C	1	O	
2	K4023	PMO-IMPELLER_DRV ; ML-6200,-,PC,BLK,V0	JC72-00825A	1	X	
3	B4022	BRACKET-P-EXIT ; ML-2060,SECC,1.2,77,85	JC61-00623A	1	O	
4	G0198	GEAR-DP,IDLE ; ML-165,POM(NW-02),WHT,M1,Z2	JC66-40911A	2	O	
5	E4047	GEAR-RDCN EXIT ; ML-2060,M90-44,0.5/1.0,53	JC66-00419A	1	O	
7	F4087	GEAR-FUSER IDLE ; ML-2060,SW-01,1.0,29,8,N	JC66-00418A	1	O	
8	E4045	GEAR-EXIT/U,ID ; ML-1605,POM,BLK	JC66-40211B	1	O	
10	F4098	GEAR-RDCN FUSER IN ; ML-2060,M90-44,0.5,79	JC66-00416A	1	O	
11	C9033	GEAR-HUB CLUTCH ; SCX-5100,POM,M0.8,Z13	JC66-00340A	1	O	
12	F4099	GEAR-RDCN FUSER OUT ; ML-2060,M90-44,1.0,2	JC66-00417A	1	O	

kopernik.ru

8.7 Regi Assembly

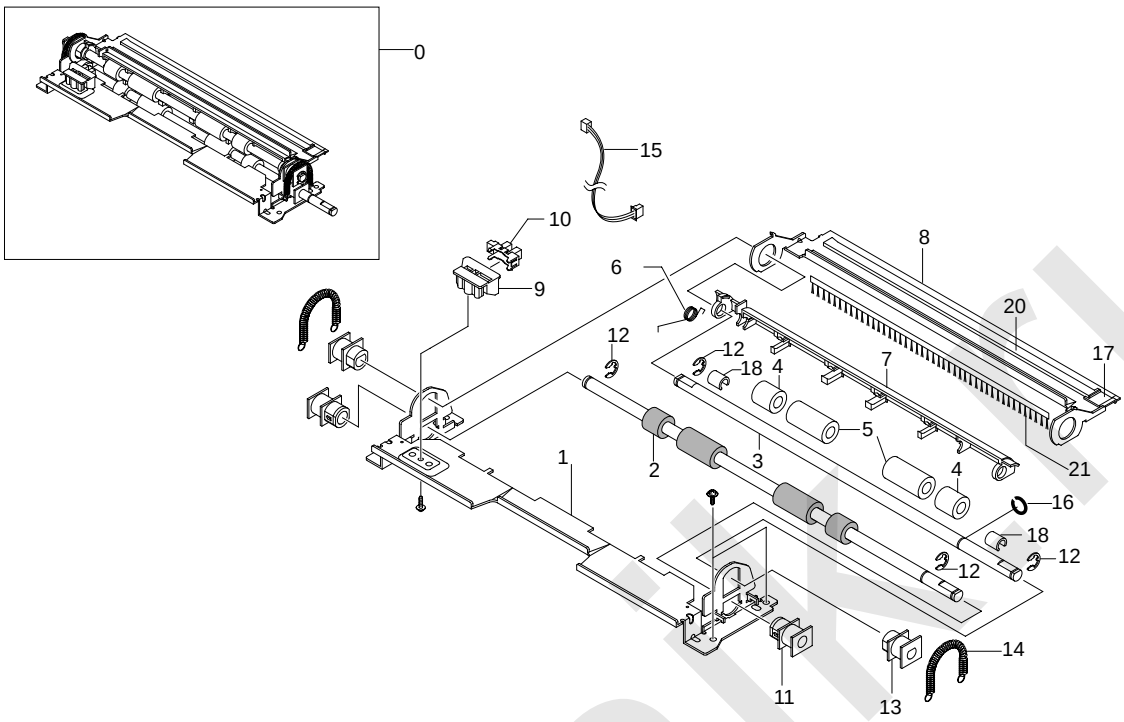

Regi Unit **Parts List**

SA : Service Available
O : Service available **X** : Service not available

No.	Location	Description	SEC.Code	Q'ty	SA	Remark
0	K3171	ELA UNIT-REGI ; ML-2060A,SEC,220V	JC96-02626A	1	O	
1	G2080	GUIDE-P_REGI LOWER ; ML-2060,SECC,1.2	JC61-00674A	1	O	
2	K4228	ROLLER-REGI LOWER L ; ML-2060,CR,13.6,BL	JC66-00450A	1	X	
3	S4129	SHAFT-REGI UPPER ; ML-2060,SUM,6	JC66-00446A	1	X	
4	K4220	ROLLER-M_REGI IDLE S25 ; ML-2150,POM,11.9	JC66-00648A	2	O	
5	K4221	ROLLER-M_REGI IDLE L25 ; ML-2150,POM,12.1	JC66-00647A	2	O	
6	Z4109	SPRING-TS ; SUS304,-,PI0.45,D5.45,L19.8	6107-001160	1	O	
7	S6005	PMO-ACTUATOR REGISHUTTER ; ML-2060,PET G/F	JC72-00998A	1	O	
8	G2081	GUIDE-P_REGI PLATE ; ML-2060,SECC,1.2	JC61-00670A	1	O	
9	H4035	HOLDER-M-SENSOR ; ML-2060,HIPS,BLK	JC61-00672A	1	O	
10	K2483	PHOTO-INTERRUPTER ; TR,90%,150mW,DIP-4,BK	0604-001095	1	O	
11	K2884	BUSH-M-ROLLER REGI L ; ML-2060,POM(M90-44)	JC61-00668A	2	O	
13	K2885	BUSH-M-ROLLER REGI U ; ML-2060,POM(M90-44)	JC61-00669A	2	O	
14	Z4110	SPRING-ES ; SWP-WPB,-,PI0.55,-,L25,N29	6107-001155	2	O	
15	H1168	CBF HARNESS-MP EMPTY ; ML-2150,CBF,UL 1061	JC39-00256A	1	O	
16	W0002	WASHER-PLAIN ; NYLON,CUTTING,ID5,OD9,T0.5	6031-001255	1	O	
17	C1016	CAP-M-WIRE PTL UPPER ; ML-2060,POM,B	JC67-00035A	1	O	
18	A0003	CAP-M_BUSHING ACTUATOR ; ML-2060,POM	JC67-00047A	2	O	
19	C1017	CAP-P_BUSHING REGI LOWER;ML-2060,SUS,T0	JC67-00038A	2	O	
20	M0248	PBA MAIN-PTL1 ; ML-2150,SEC,KOREA,PTL1 B'D	JC92-01475A	1	X	
21	B5010	MEC- BRUSH ANTISTATIC ; ML-6060A,SEC,NTR	JC75-00095A	1	O	

8.8 SMPS Assembly

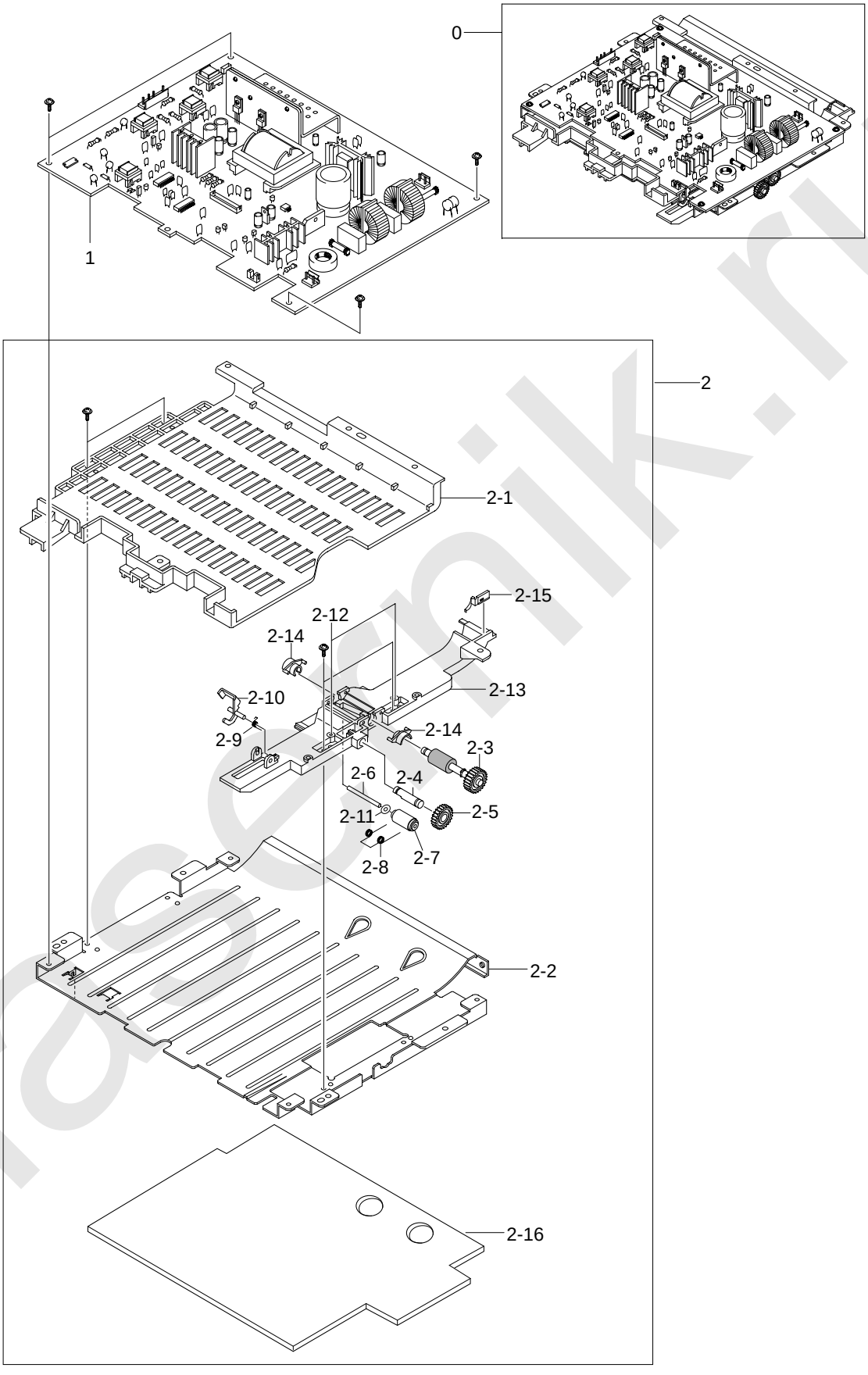

laserpik.ru

SMPS Unit Parts List

SA : Service Available
O : Service available **X** : Service not available

No.	Location	Description	SEC.Code	Q'ty	SA	Remark
0	S7016	ELA HOU-SMPS_HVPS_V2(220V) ; ML-2550,SEC	JC96-02777B	1	O	⚠ 220V
1	S7050	SMPS-V2_HVPS ; ML-2150,CARDINAL-V2,AC/DC	JC44-00053A	1	O	⚠ 220V
2	D3026	MEA UNIT-DUPLEX ; ML-2550,XEROX,USA,DUPLEX	JC97-01714B	1	O	
2-1	G2066	GUIDE-M-LEFT, DUP ; ML-2060,HIPS, HB,2.0,4	JC61-00664A	1	O	
2-2	G2084	GUIDE-P-BOTTOM, DUP ; ML-2060,SECC,0.8,248	JC61-00661A	1	O	
2-3	F6137	MEA UNIT-ROLLER FEED, DUP ; ML-2150,SEC	JC97-01713A	1	X	
2-4	G0456	ICT-STUD DRV GEAR, DUP ; ML-2060,SWCH10181	JC70-00327A	1	O	
2-5	G0198	GEAR-DP,IDLE ; ML-165,POM(NW-02),WHT,M1,Z2	JC66-40911A	1	O	
2-6	S4108	SHAFT-IDLE ROLL, DUP ; ML-2060,SUM24L,24,2	JC66-00444A	1	O	
2-7	K4223	ROLLER-M-IDLE, DUP ; ML-2060,POM, SW01,8.0	JC66-00442A	1	O	
2-8	K2702	SPRING-TS ; SUS304-WPB,-,PI0.4,D6.7	6107-001158	1	O	
2-9	Z4110	SPRING-EMPTY ; ML-6000,SUS304-WPB,PI0.25	JC61-70965A	1	O	
2-10	E6155	PMO-ACTUATOR FEED, DUP ; ML-2060,POM,BLK	JC72-00997A	1	O	
2-11	W0003	PCT-SILP WASHER ; SRP-350,PET,T0.5	JK72-00058A	1	X	
2-12	G2098	ICT-STUD PAPER GUIDE, DP ; ML-2150,SUS 303	JC70-00457A	2	O	
2-13	G2075	GUIDE-M-RIGHT, DUP ; ML-2060,ABS, V0,2.0,5	JC61-00662A	1	O	
2-14	F6042	BUSH-M-FEED, DUP ; ML-2060,POM, SW01,4.1,7	JC61-00665A	2	O	
2-15	K3929	GUIDE-P_SKEW, DUP ; ML-2150,SUS304,0.15,13	JC61-00787A	1	X	
2-16	S5071	SHEET-GUIDE BOTTOM ; ML-2550,WEBSULER,T5	JC63-00297A	1	O	

laser-tk.ru

8.9 Cassette Assembly

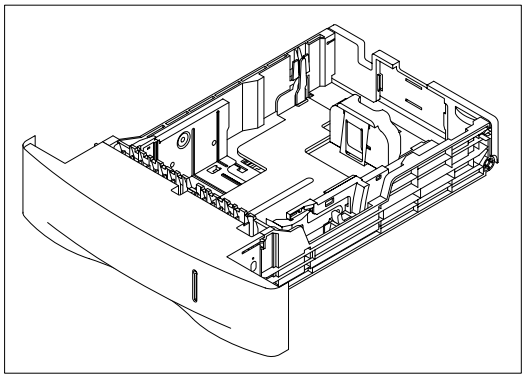

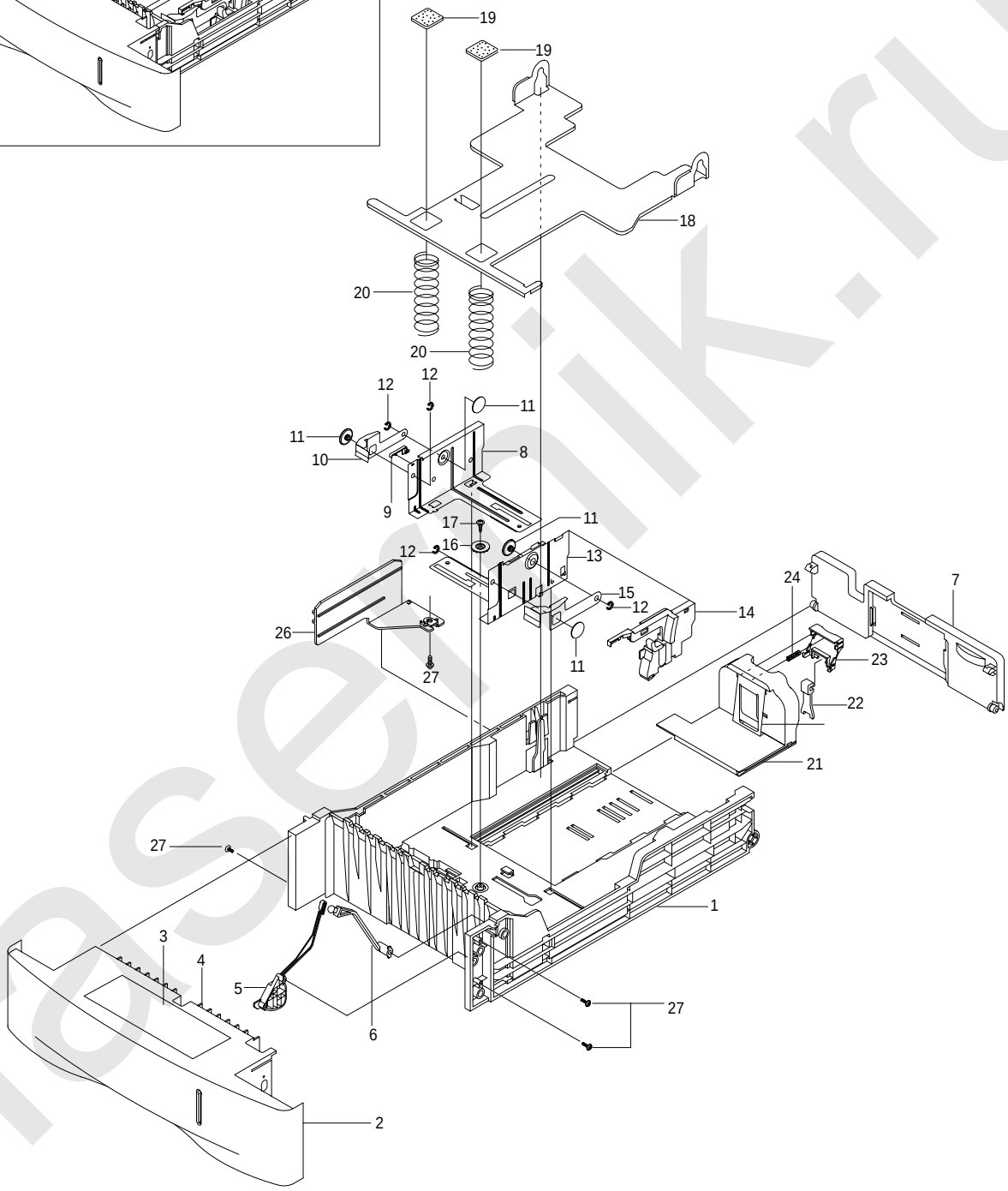

laserchik.ru

Cassette Assembly Parts List

SA : Service Available
O : Service available **X** : Service not available

No.	Location	Description	SEC.Code	Q'ty	SA	Remark
0	K3096	ELA UNIT-CASSETTE(550) ; ML-2150,SEC,110	JC96-02845B	1	O	
1	F2112	FRAME-M-CASSETTE ; ML-2060,HIPS,HB,BLACK	JC61-00642A	1	O	
2	G2062	GUIDE-M-HANDLE ; ML-2060,ABS,V0,IVOR	JC61-00655A	1	O	
3	L0209	LABEL(R)-CASSETTE ; ML-2060,SAMSUNG,TETRON	JC68-01031A	1	X	
4	G2064	GUIDE-M-INNER CST ; ML-2060,HIPS,HB	JC61-00704A	1	O	
5	H4028	HOLDER-M-INDICATOR ; ML-2060,ABS,BLK	JC61-00639A	1	O	
6	K3263	INDICATOR-M-EMPTY ; ML-2060,HIPS,-,RED,HB	JC64-00041A	1	O	
7	E5005	GUIDE-M-EXTENSION CST ; ML-2060,HIPS,HB	JC61-00644A	1	O	
8	G2264	GUIDE-P-SIDE,L ; ML-2060,SECC,T1.2	JC61-00647A	1	X	
9	C1014	CAP-M-GUIDE SIDE,L ; ML-2060,ABS,BLK	JC67-00037A	1	O	
10	F0004	IPR-P-FINGER LEFT ; ML-2060,SPCC,T1.2	JC70-00325A	1	O	
11	F0001	BUSH-M-FINGER,F ; ML-2060,POM(M90-44)	JC61-00653A	4	O	
12	W0002	WASHER-PLAIN ; NYLON,CUTTING,ID5,OD9,T0.5	6031-001255	4	O	
13	G2265	GUIDE-P-SIDE,R ; ML-2060,SECC,T1.2	JC61-00649A	1	X	
14	G2076	GUIDE-M-SIDE LOCK ; ML-2060,ABS,HB	JC61-00645A	1	O	
15	F0005	IPR-P-FINGER RIGHT ; ML-2060,SPCC,T1.2	JC70-00326A	1	O	
16	G0369	GEAR-PINION ; SF4000,POM,WHT,M1,Z16	JG66-40003A	1	O	
18	P5146	PLATE-P-KNOCK_UP ; ML-2060,SECC,T1.0,243	JC61-00651A	1	X	
19	K4243	RPR-PAD CST ; ML-165,CORK,25.8*24.6,NTR	JC73-10910A	2	O	
21	G2073	GUIDE-M-REAR ; ML-2060,HIPS,HB,IVORY	JC61-00646A	1	O	
22	G2068	GUIDE-M-LOCK A ; ML-2150,ABS,HB,C750	JC61-00267B	1	O	
23	K3429	KNOB-M-REAR ; ML-2060,ABS,IVORY	JC64-00042A	1	O	
24	Z4247	SPRING ETC-REMAIN ; ML-9400W,SUS304WPB,0.4	JC61-00414A	1	O	
25	G2088	GUIDE-P-REAR PAPER CST ; ML-2060,SUS-301,0	JC61-00751A	1	O	
26	G2071	GUIDE-M-PAPER SIZE ; ML-2060,POM,WHT	JC61-00648A	1	O	
28	K4264	STOPPER-GUIDE_SIDE ; ML-2150,CR V0,10.0	JC61-00842A	4	O	

laser-info.ru

8.10 SCF Assembly

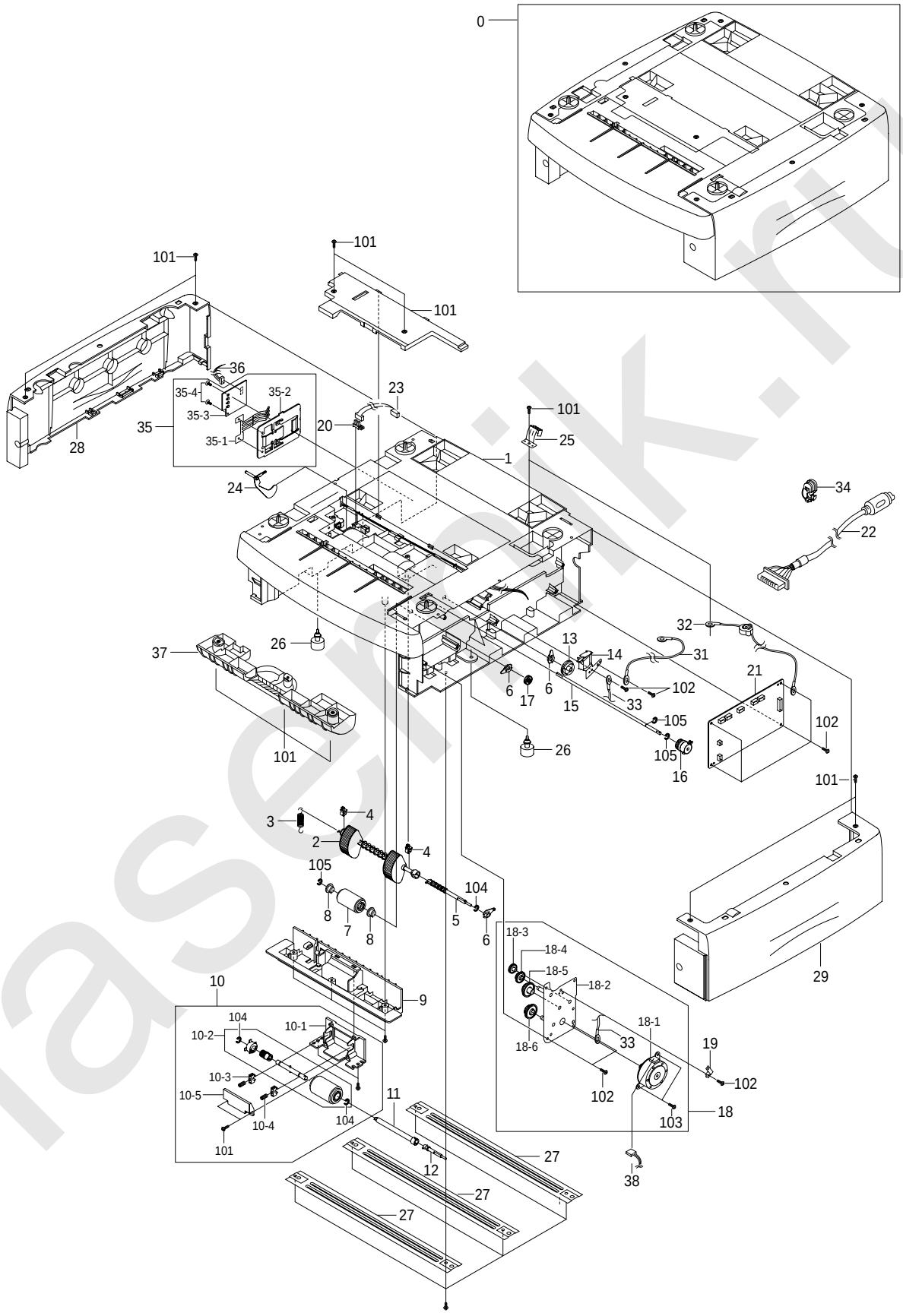

laserpik.ru

SCF Assembly Parts List(1/2)

SA : Service Available
O : Service available **X** : Service not available

No.	Location	Description	SEC.Code	Q'ty	SA	Remark
0	L1012	ELA UNIT-SCF ; ML-2150	JC96-02842B	1	X	
1	S1031	FRAME-M-SCF ; ML-2060,	JC61-00643A	1	O	
2	P2051	MEA UNIT-PICK UP ASS'Y	JC96-02683A	1	O	
2-1	P2068	HOUSING-M-PICKUP ; ML-	JC61-00636A	1	O	
2-2	P2148	RUBBER-PICK UP ; ML-21	JC73-00127A	2	O	
3	E5025	SPRING ETC-EXTENSION	JC61-70950A	1	O	
4	F6161	PMO-BUSHING FEED ; ML-	JC72-00382B	2	O	
5	P2153	SHAFT-M-PICK UP ; ML-2	JC66-00440A	1	O	
6	S4068	PMO-BEARING SHAFT ; ML	JC72-41191B	4	O	
7	F6089	HOUSING-M-FEED ; ML-21	JC61-00637A	1	O	
8	P2038	BEARING-PICK UP ; ML-8	JC66-10202A	2	O	
9	G2065	GUIDE-M-INNER,SCF ; ML	JC61-00650A	1	O	
10	K3172	ELA UNIT-RETARD ; ML-2	JC96-02682A	1	O	
11	S4116	SHAFT-M-COUPLING RET	JC66-00441A	1	O	
12	S4120	SHAFT-M-GEAR RETARD;	JC66-00438A	1	O	
13	P2059	GEAR-SCF PICK_UP CAM	JC66-00534A	1	O	
14	S8014	SOLENOID-MP;DLH-34L0	JC33-00013A	1	O	
15	F6211	SHAFT-FEED SCF ; ML-20	JC66-00593A	1	O	
16	C9049	MEP-CLUTCH FEED SCF;	JC47-00009B	1	O	
17	G0415	GEAR-REGI Z25 ; ML-215	JC66-00420A	1	O	
18	M2101	ELA UNIT-MOTOR SCF ; M	JC96-02858A	1	O	
18-1	M2165	MOTOR STEP-SCF ; -,ML-	JC31-00005E	1	O	
18-2	S1009	BRACKET-P-SCF ; ML-206	JC61-00624A	1	O	
18-3	G0413	GEAR-REGI IDLE ; ML-21	JC66-00408A	1	O	
18-4	G0400	GEAR-RDCN RETARD ; ML-	JC66-00410A	1	O	
18-5	P2060	GEAR-SCF RDCN PICK_U	JC66-00428A	1	O	
18-6	F6087	GEAR-SCF RDCN FEED ; M	JC66-00427A	1	O	
19	F6094	IPR-GROUND SPRING_ F	JC70-00464A	1	O	
20	W3026	PHOTO-INTERRUPTER ; TR	0604-001095	1	O	
21	M0416	PBA SUB-SCF ; ML-2060,	JC92-01436A	1	O	
22	H1227	CBF HARNESS-SCF ; ML-2	JC39-00248A	1	O	
23	H1230	CBF HARNESS-SCF EMPT	JC39-00250A	1	O	
24	S1071	PMO-ACTUATOR EMPTY,S	JC72-00992A	1	O	
25	K3332	IPR-GROUND TOP ; ML-60	JC70-11028A	1	O	
26	F1013	FOOT-ML80;ML-80,CR70	JC61-40001A	2	O	
27	K2861	BAR-P_CROSS BOTTOM ; M	JC71-00042A	3	O	
28	S1011	COVER-M-LEFT SCF ; ML-	JC63-00112A	1	O	
29	S1013	COVER-M-RIGHT SCF ; ML	JC63-00113A	1	O	
30	D2010	COVER-M-DUMMY SCF ; ML	JC63-00114A	1	O	
31	H1231	CBF HARNESS-SCF GND;	JC39-40608A	1	O	
32	L5004	CBF HARNESS-LIU GND;	JB39-00103A	1	O	
33	H1182	CBF HARNESS-OPE ; SF30	JB39-40532A	1	O	
34	C0029	BUSH-CABLE ; ML-2150,N	JC61-00804A	1	O	

SCF Assembly Parts List(2/2)

SA : Service Available
O : Service available **X** : Service not available

No.	Location	Description	SEC.Code	Q'ty	SA	Remark
35	K2953	ELA HOU-CST SENSOR H	JC96-02127A	1	O	
35-1	S3058	IPR-PLATE SENSOR ; ML-	JC70-00192A	1	O	
35-2	S3055	IPR-BRACKET SENSOR ; M	JC70-00195A	1	O	
35-3	M0301	PBA SUB-CASSETTE ; ML-	JC92-01336A	1	X	
36	H1234	CBF HARNESS-SCF PAPE	JC39-00297A	1	O	
37	M2053	CBF HARNESS-MOTOR ; ML	JC39-00157A	1	O	
38	G2069	GUIDE-M-PAPER PATH ;M	JC61-00803A	1	O	

laserrnik.ru