5 Parts List

PL 1- Standby Power
PL 1.10 SMPS and PBA Main 5-3

PL 2 - User Interface
PL 2.10 OPE Assembly (1 of 2) 5-4
PL 2.11 OPE Assembly (2 of 2) 5-5

PL 4 - Main Frame, Covers and Drives
PL 4.10 Base Frame Assembly 5-6
PL 4.15 Main Frame Assembly 5-7
PL 4.20 Drives Assembly 5-8
PL 4.25 Covers 5-9

PL 5 - Document Transport
PL 5.10 DADF Assembly (1 of 5) 5-10
PL 5.11 DADF Assembly (2 of 5) 5-11
PL 5.12 DADF Assembly (3 of 5) 5-12
PL 5.13 DADF Assembly (4 of 5) 5-13
PL 5.14 DADF Assembly (5 of 5) 5-14

PL 6 - Imaging
PL 6.10 LSU 5-15

PL 7 - Paper Supply
PL 7.10 Tray 1 Cassette Assembly 5-16
PL 7.15 Tray 2 Cassette Assembly (1 of 2) 5-17
PL 7.16 Tray 2 Cassette Assembly (2 of 2) 5-18

PL 8 - Paper Transport
PL 8.10 Side Cover Assembly (1 of 2) 5-19
PL 8.11 Side Cover Assembly (2 of 2) 5-20
PL 8.15 Feeder Assembly 5-21
PL 8.20 MP Assembly 5-22
PL 8.25 Pickup Assembly 5-23

PL 9 - Xerographics
PL 9.10 Toner, Drum Cartridge & Fuser 5-24

PL 10 - Fusing and Copy/Print Transportation
PL 10.10 Exit Assembly 5-25

PL 14 - Scanner
PL 14.10 ELA HOU Scanner Assembly (1 of 2) 5-26
PL 14.11 ELA HOU Scanner Assembly (2 of 2) 5-27

PL 31 - Maintenance/Installation/Removal Kits
PL 31.10 Maintenance/Installation/Removal Kits 5-28
Part Number Index 5-29

laser-nik.ru

PL 1.10 SMPS and PBA Main

Item	Part	Description
1	–	IPR - Shield SMPS Upper (Not Spared) (REP 1.1)
2	152N11548	CBF Power Switch Grey
3	152N11550	CBF Harness - Power + HVPS
4	140N62860	SMPS + HVPS (XE) (REP 1.1)
–	140N62859	SMPS + HVPS (NASG/XCL) (REP 1.1)
5	–	ELA HOU - Shield Main Lower (Not Spared)
6	–	Shield - P Main Lower (P/O PL 1.10 Item 5)
7	–	CBF Harness - LIU GND (P/O PL 1.10 Item 5)
8	–	CBF Harness - Inlet (P/O PL 1.10 Item 5)
9	140N62862	PBA MAIN (C20, M20) (REP 1.2)
–	140N62861	PBA MAIN (M20i) (REP 1.2)
10	–	Not Used
11	140N62864	PBA ETC - PS- DIMM
12	144N00128	SDRAM - DIMM (32MB) (C20, M20)
–	144N00129	SDRAM - DIMM (48MB) (M20i)
13	–	PBA LIU (see below for variants) (REP 1.2)
–	140N62876	PBA LIU (G1) (U.K.)
–	140N62879	PBA LIU (G4) (NASG/XCL)
–	140N62878	PBA LIU (G3) (Poland)
–	140N62877	PBA LIU (G2) (Russia)
14	140N62863	PBA SUB - NPC3 - MFP (REP 1.2)
–	140N62871	PBA SUB NPC3 Direct (REP 1.2)
15	152N11551	CBF Harness LIU
16	140N62875	PBA Foreign Device Interface
17	152N11557	PBA Foreign Device Interface Harness
18	–	PBA Foreign Device Interface Bracket (P/O PL 1.10 Item 19)
19	–	Foreign Device Interface Kit (REF: PL 31.10 Item 1)
20	117N01602	AC Power Cord (NASG/XCL)
21	117N01313	USB Cable
22	117N01620	Telephone Line Cord (NASG/XCL)

NOTE: *1. If necessary, refer to GP 20 for the acronym list and cross reference lists of more commonly recognised part names.*

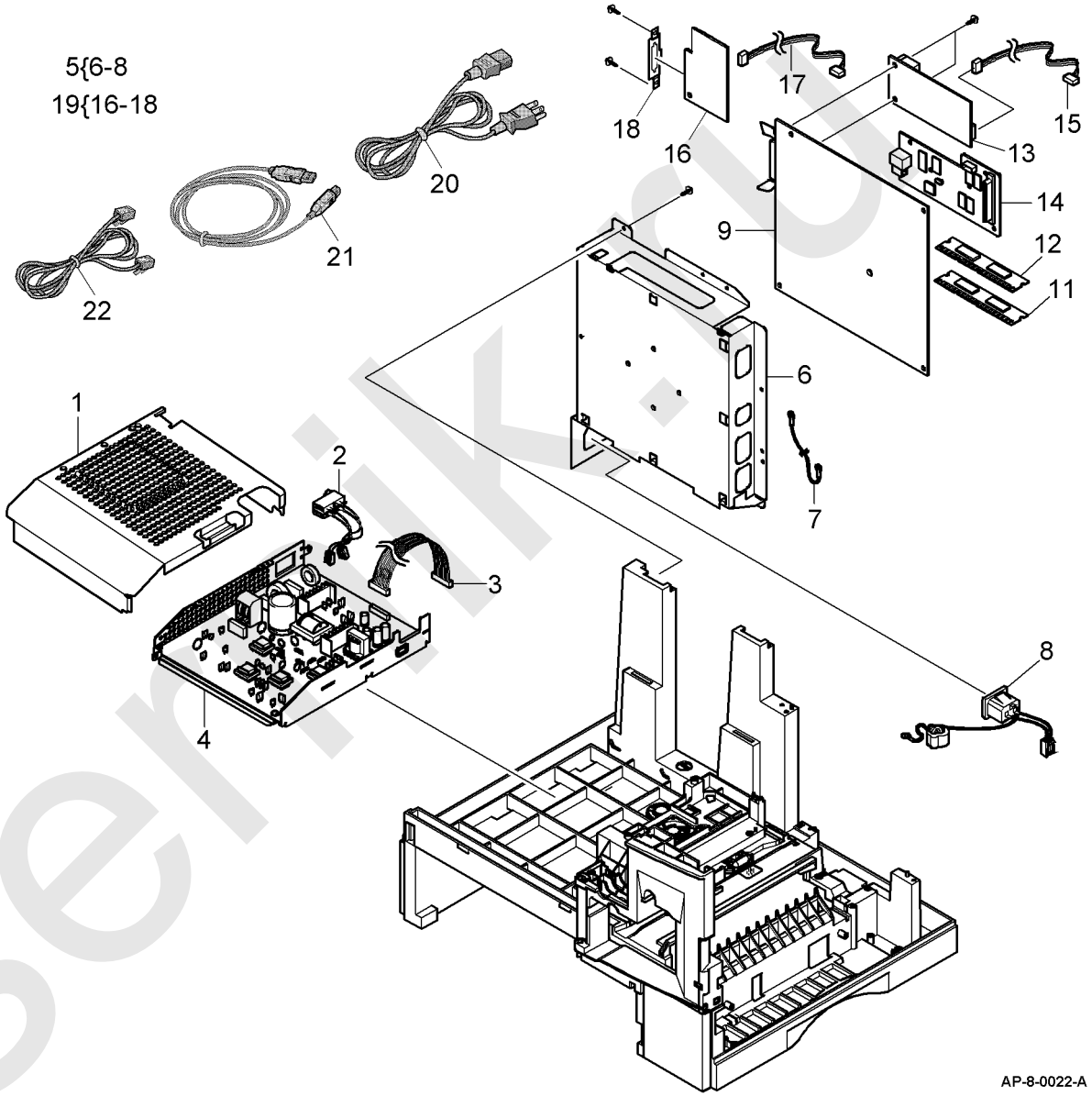

laserrik.ru

PL 2.10 OPE Assembly (1 of 2)

Item	Part	Description
1	–	ELA HOU OPE Assembly (Not Spared) (REP 2.1)
2	–	Window LCD (Not Spared)
3	091N80194	Sheet Overlay Center (A) (C20, M20)
–	091N80193	Sheet Overlay Center (A) (M20i)
–	091N80201	Sheet Overlay Center (A) (French) ((C20, M20))
–	091N80200	Sheet Overlay Center (A) (French) ((M20i))
–	091N80203	Sheet Overlay Center (A) (C20, M20) (Portuguese)
–	091N80202	Sheet Overlay Center (A) (M20i) (Portuguese)
–	091N80199	Sheet Overlay Center (A) (C20, M20) (Spanish)
–	091N80198	Sheet Overlay Center (A) (M20i) (Spanish)
4	–	Panel OPE Front (Not Spared)
5	091N80196	Sheet Name Plate (C20)
–	091N80197	Sheet Name Plate (M20)
–	091N80195	Sheet Name Plate (M20i)
6	–	Sheet Numerical (Not Spared) (NASG/XCL)
7	002N02281	ELA HOU E-mail Option Unit
8	700N00097	Sheet Email (EU)
–	700N00096	Sheet E-mail
9	–	Cover E-mail (P/O PL 2.10 Item 7) (REP 2.1)
10	–	E-mail Keypad (P/O PL 2.10 Item 7) (REP 2.1)
11	–	Key Plate (P/O PL 2.10 Item 7) (REP 2.1)
12	–	PBA SUB E-mail (P/O PL 2.10 Item 7) (REP 2.1)
13	002N02283	Cover Dummy E-mail (C20, M20)
14	–	Cover M OPE (REF: PL 2.11 Item 1)

NOTE: *If necessary, refer to GP 20 for the acronym list and cross reference lists of more commonly recognised part names.*

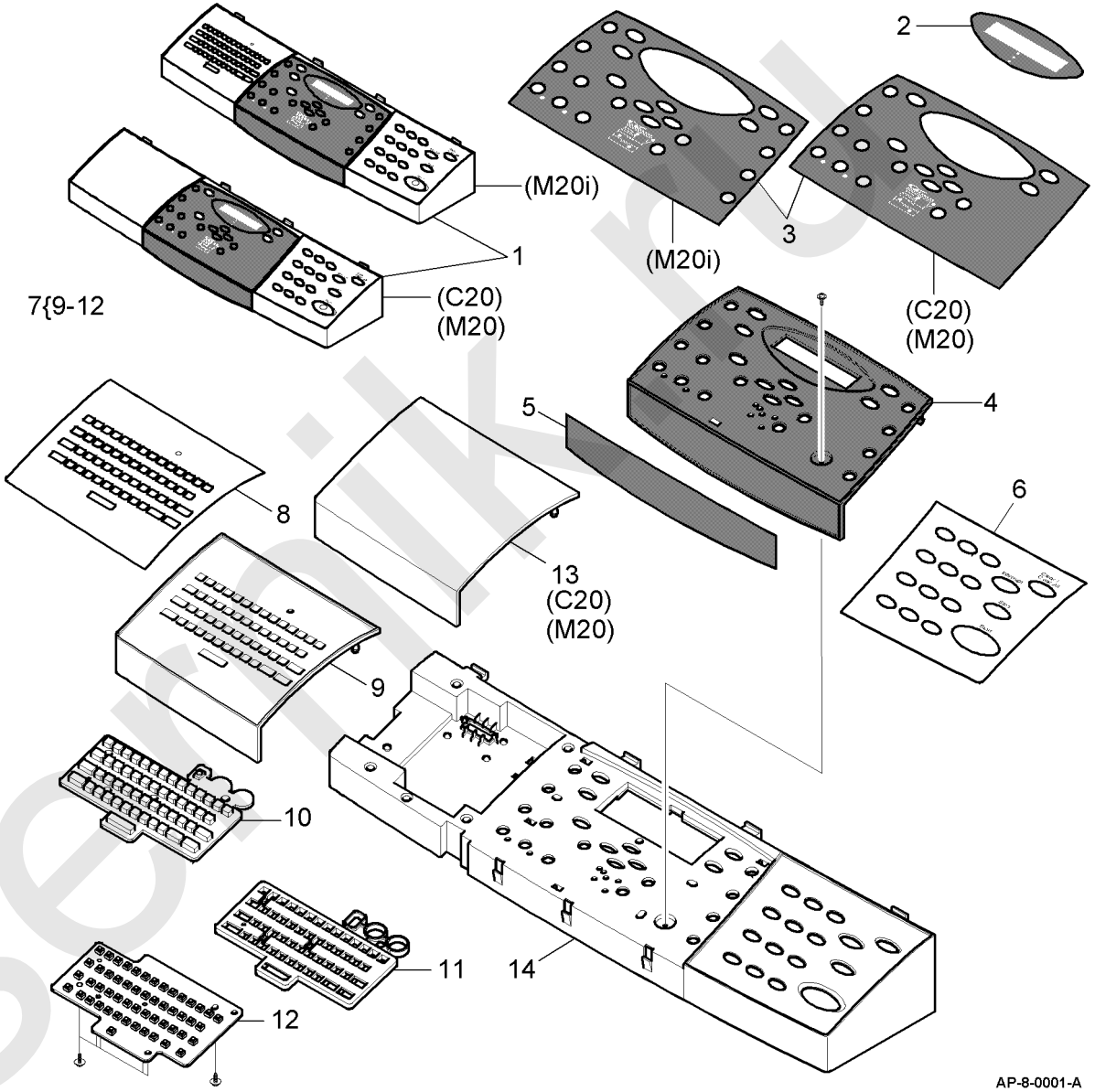

lasermik.ru

PL 2.11 OPE Assembly (2 of 2)

Item	Part	Description
1	002N02282	Cover M OPE
2	018N00193	Indicator (REP 2.1)
3	029N00355	Rubber Scroll (A) (REP 2.1)
4	029N00345	Key M Copy (REP 2.1)
5	029N00356	Rubber Numerical (REP 2.1)
6	029N00346	Key M E-mail (REP 2.1)
7	029N00354	Rubber Copy (A) (REP 2.1)
8	029N00347	Key M Navigator (REP 2.1)
9	140N62866	PBA SUB - OPE Joint (REP 2.1)
10	140N62865	PBA SUB - OPE (REP 2.1)
11	029N00348	Key M Job Status (REP 2.1)
12	029N00349	Key M Manual (REP 2.1)
13	029N00350	Key M Numerical (REP 2.1)
14	018N00194	Indicator M Job Interrupt (REP 2.1)
15	029N00351	Key M Job Interrupt (REP 2.1)
16	029N00352	Key M Stop (REP 2.1)
17	029N00353	Key M Start (REP 2.1)
18	–	CBF Signal - OPE FFC (Not Spared)

NOTE: *If necessary, refer to GP 20 for the acronym list and cross reference lists of more commonly recognised part names.*

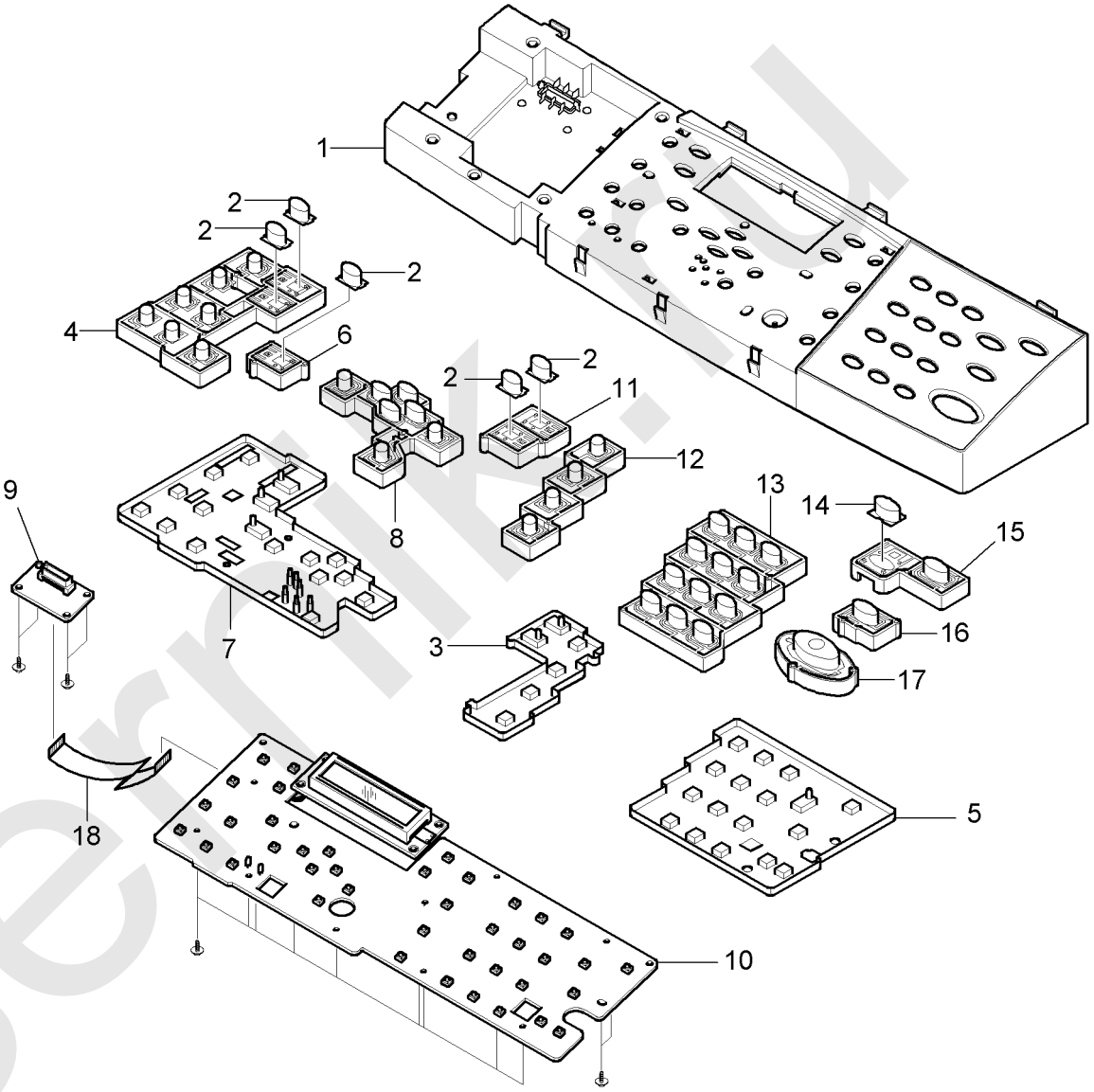

laserrik.ru

PL 4.10 Base Frame Assembly

Item	Part	Description
1	–	ELA HOU - Base Frame (Not Spared)
2	–	Screw - Taptite (REF: PL 31.10 Item 6)
3	–	Screw - Taptite (REF: PL 31.10 Item 6)
4	009N01467	Spring ETC - Torsion
5	017N00212	Foot
6	–	Holder Catch CST MC2 (Not Spared)
7	–	IPR - Channel Base Frame (Not Spared)
8	015N00440	IPR - Ground Plate A (OPC)
9	015N00441	IPR - Ground Plate B (Base)
10	–	PMO - Base Frame (Not Spared)
11	–	PMO - Bracket Push DEV (Not Spared)
12	030N00606	PMO - Bracket Side Open
13	–	PMO - Cover Front Dummy (Not Spared)
14	130N01213	ELA M/M - AUD Speaker
15	–	Spring ETC - DEVE Rear (Not Spared)
16	–	CBF Harness - OPC GND (Not Spared)
17	127N07300	Fan - DC (Cardinal)
18	–	Spring ETC - DEV Front (Not Spared)
19	–	Holder - M Roller (Not Spared)
20	–	Shaft DEV (Not Spared)
21	–	IPR - Ground Plate SCF (Not Spared)
22	152N01991	CBF - Harness-SCF
23	140N62870	PBA Air Temperature
24	–	Screw - Taptite (REF: PL 31.10 Item 6)
25	022N01486	Solenoid - Pickup

NOTE: *1. If necessary, refer to GP 20 for the acronym list and cross reference lists of more commonly recognised part names.*

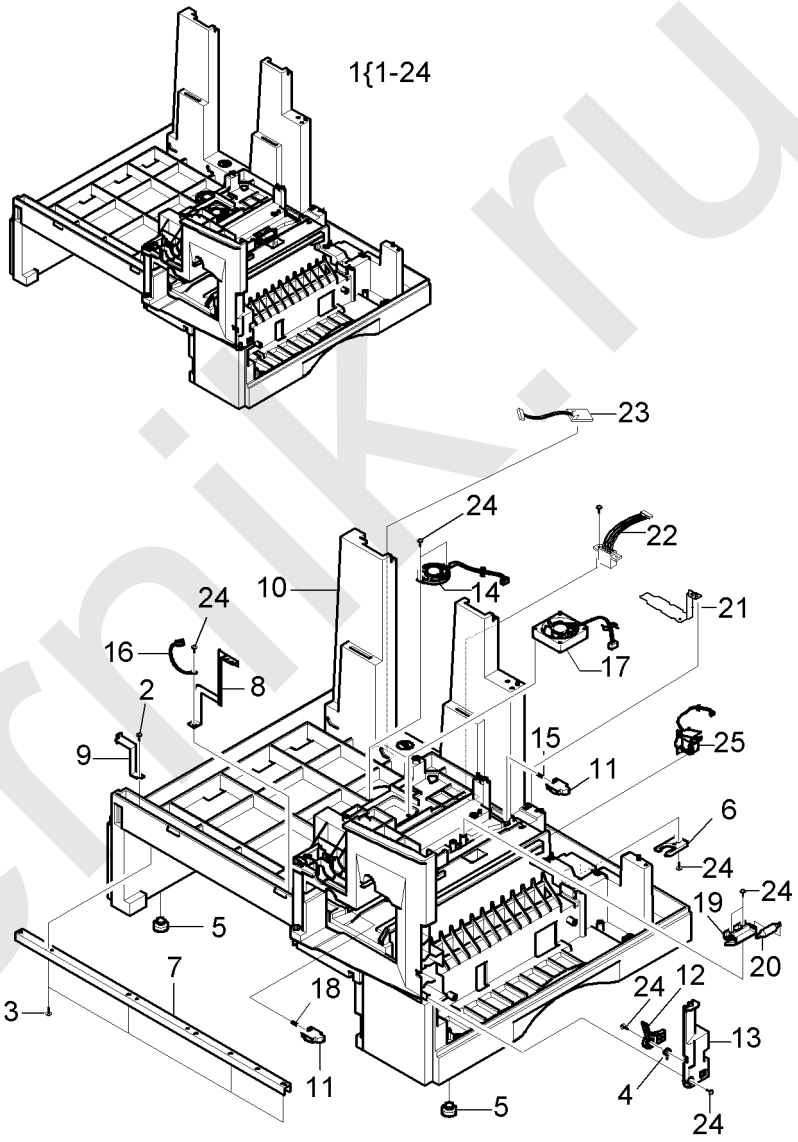

laserpik.ru

PL 4.15 Main Frame Assembly

Item	Part	Description
1	002N02279	ELA HOU - Frame Main Assembly (REP 4.4)
2	–	PMO - Housing Terminal MC2 (P/O PL 4.15 Item 1)
3	–	IPR - Terminal Blade (P/O PL 4.15 Item 1)
4	–	IPR - Terminal Supply (P/O PL 4.15 Item 1)
5	–	IPR - Terminal TR (P/O PL 4.15 Item 1)
6	140N62873	PBA SUB Terminal
7	–	Holder Terminal (P/O PL 4.15 Item 1)
8	–	CBF - Harness - Blade + Supply + DEV (P/O PL 4.15 Item 1)
9	–	CBF - Harness - Main - THV Wire (P/O PL 4.15 Item 1)
10	–	CBF - Harness - Main - MHV Wire (P/O PL 4.15 Item 1)
11	–	PMO - Frame Main (P/O PL 4.15 Item 1)
12	–	PMO - Lens Toner Sensor (P/O PL 4.15 Item 1)
13	–	IPR - GND Exit (P/O PL 4.15 Item 1)
14	–	Ring - CS (P/O PL 4.15 Item 1)
15	–	IPR - GND OPC Base (P/O PL 4.15 Item 1)
16	–	IPR - Ground Fuser MC2 (P/O PL 4.15 Item 1)
17	–	IPR - Guard C/O S/W (P/O PL 4.15 Item 1)
18	–	IPR - GND Terminal (P/O PL 4.15 Item 1)
19	152N11556	CBF Harness - AC Wire
20	110N01041	CBF - Harness; Switch - Micro
21	–	CBF - Harness Motor (P/O PL 4.15 Item 1)
22	130N01205	PBA SUB - Exit Sensor
23	130N01208	PBA SUB - Toner RX
24	–	Gear - Exit / U, ID (P/O PL 4.15 Item 1)
25	–	Gear - Exit, Idle (Z17) (P/O PL 4.15 Item 1)
26	011N00463	CBF - Harness Thermistor Joint
27	–	PMO - Housing Terminal (P/O PL 4.15 Item 1)
28	–	IPR - Terminal Fuser (P/O PL 4.15 Item 1)
29	113N00364	PMO - CAP Connector L
30	113N00365	PMO - CAP Connector U
31	–	Spring - Clutch (P/O PL 4.15 Item 1)

NOTE: *If necessary, refer to GP 20 for the acronym list and cross reference lists of more commonly recognised part names.*

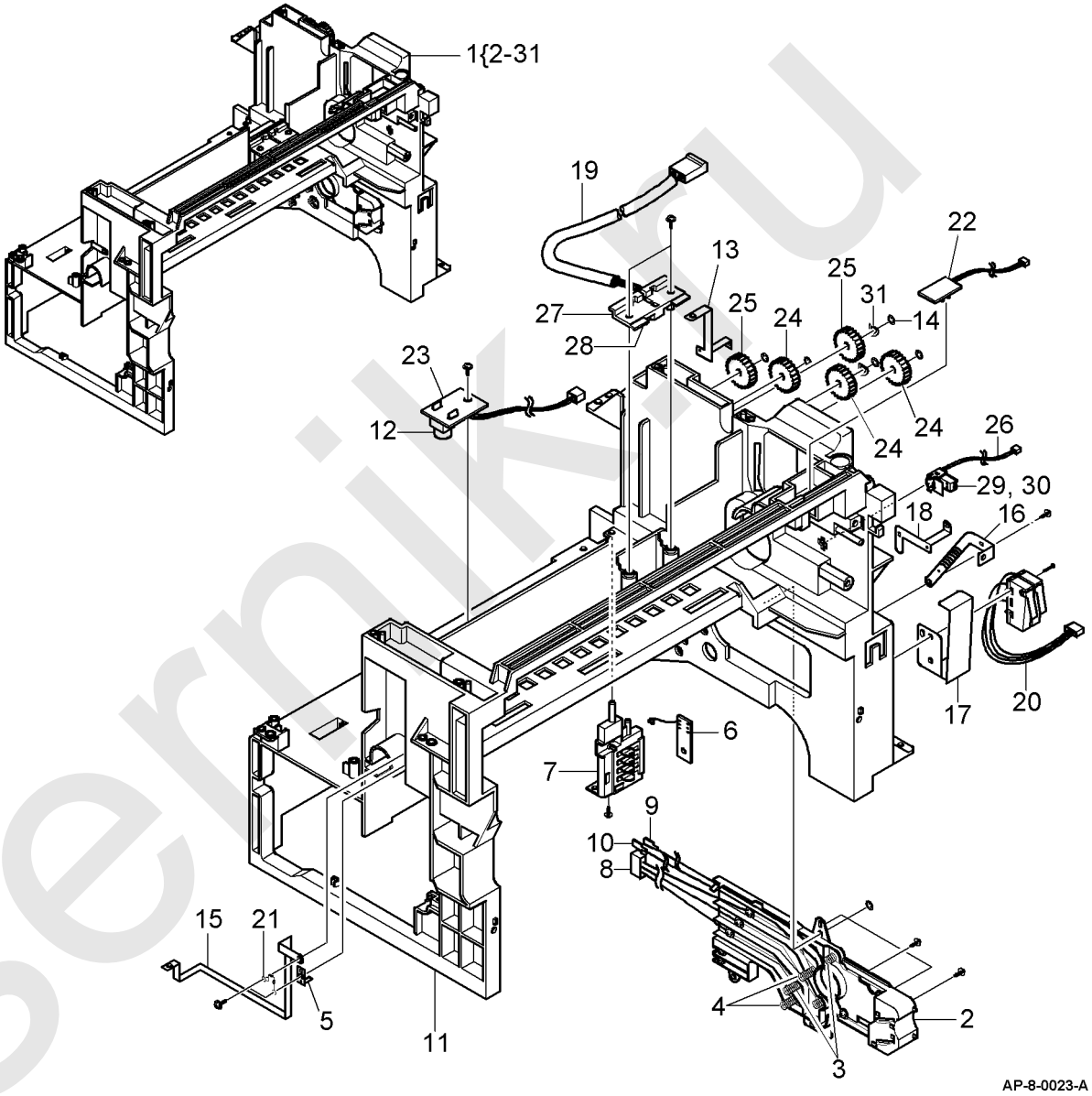

laserniki.ru

PL 4.20 Drives Assembly

Item	Part	Description
1	002N02289	ELA HOU - Drive Assembly (REP 4.1)
2	127N07298	Motor Step - MCK2 (Main)
3	152N11554	CBF Harness - Fuser Motor
4	127N07299	Motor DC - MCK2 (BLDC)
5	152N11555	CBF Harness - Feed Motor
6	–	Gear - Exit/U (P/O PL 4.20 Item 1)
7	–	Ring - C (P/O PL 4.20 Item 1)
8	–	IPR - Link Duplex (P/O PL 4.20 Item 1)
9	–	Gear - Swing DRV (34/17) (P/O PL 4.20 Item 1)
10	–	Gear - 31/19 (P/O PL 4.20 Item 1)
11	–	Gear - 71/23 (P/O PL 4.20 Item 1)
12	–	Gear - DEV DRV (P/O PL 4.20 Item 1)
13	–	PMO - DEV/Coupling (P/O PL 4.20 Item 1)
14	–	Gear - 86/23 (P/O PL 4.20 Item 1)
15	–	Gear - RDCN Feed Inner (P/O PL 4.20 Item 1)
16	–	Gear - Hub Clutch (P/O PL 4.20 Item 1)
17	–	Gear - RDCN Feed Outer (P/O PL 4.20 Item 1)
18	–	Gear - Feed DRV (P/O PL 4.20 Item 1)
19	–	Gear - OPC 53/37 (P/O PL 4.20 Item 1)
20	–	Gear - OPC DRV (P/O PL 4.20 Item 1)
21	–	Gear - OPC (P/O PL 4.20 Item 1)
22	–	IPR - BRKT - Break (P/O PL 4.20 Item 1)
23	–	Gear - Fuser DRV Outer (P/O PL 4.20 Item 1)
24	–	Gear - Fuser DRV Inner (P/O PL 4.20 Item 1)
25	–	Ring - E (REF: PL 31.10 Item 6)
26	–	MEC - Brake Gear (P/O PL 4.20 Item 1)
27	–	Fan (P/O PL 4.20 Item 1)
28	–	IPR - BRKT Motor (P/O PL 4.20 Item 1)
29	–	ELA HOU - Duct Fan (P/O PL 4.20 Item 1) (REP 4.1)
30	–	PMO - Duct Fan (P/O PL 4.20 Item 29)
31	127N01375	Fan - DC (P/O PL 4.20 Item 29)
32	–	CBF Harness - LIU GND (Not Spared)

NOTE: *If necessary, refer to GP 20 for the acronym list and cross reference lists of more commonly recognised part names.*

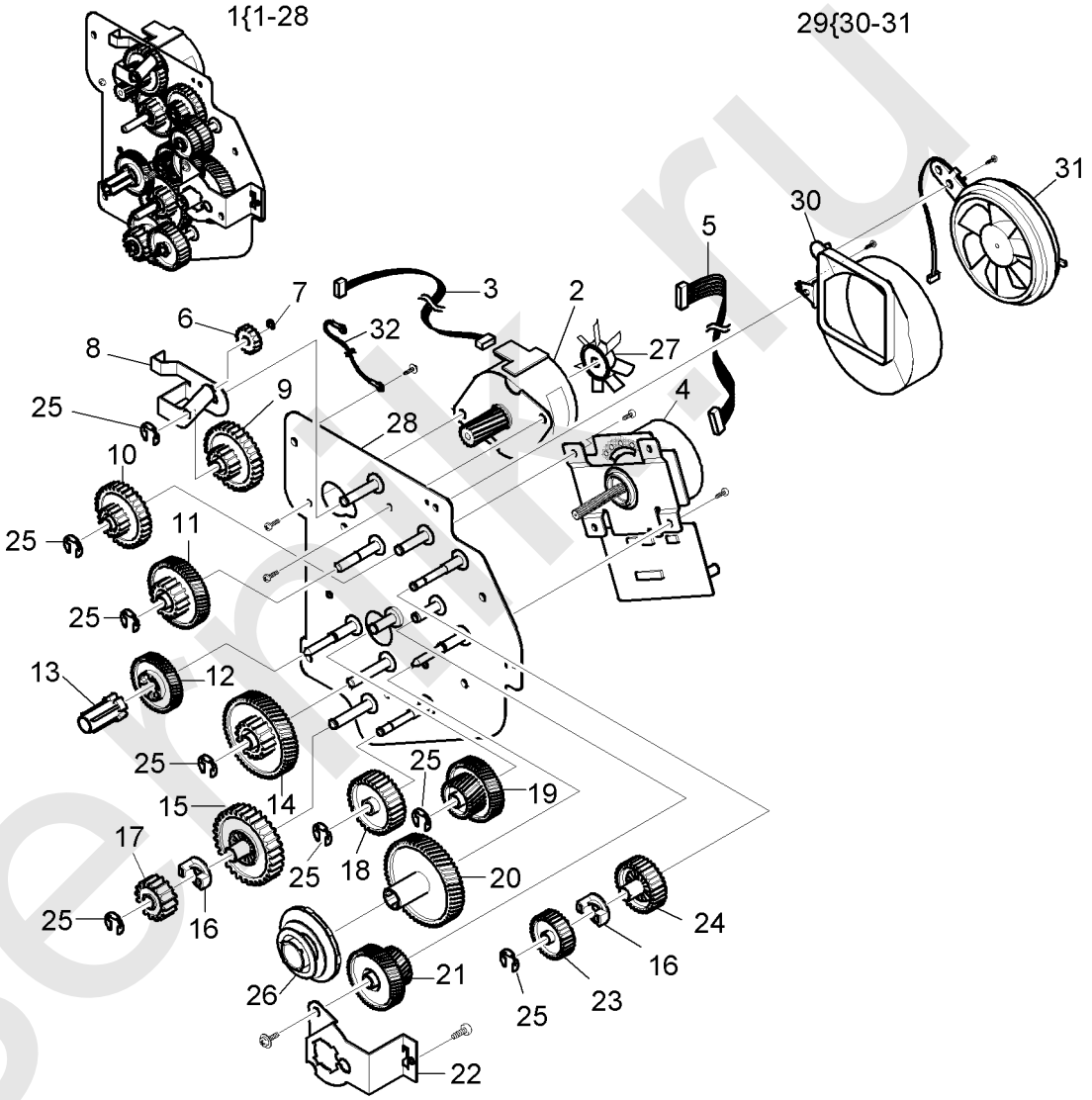

laserman.ru

PL 4.25 Covers

Item	Part	Description
1	002N02107	MEA Unit - Cover PA Exit Assembly
2	050N00392	PMO - Tray Extension MP NE
3	–	PMO - Cover Paper Exit (P/O PL 4.25 Item 1) (REP 10.3)
4	–	PMO - Connect Paper MFP (C20, M20) (Not Spared)
–	–	PMO - Connect Paper MFP (M20i) (Not Spared)
5	002N02009	PMO Cover Exit Rear (REP 4.3)
6	002N02161	MEA Unit - Cover Front Assembly
7	–	Plate - Badge (XRX) (P/O PL 4.25 Item 6)
8	–	Cover - M - Front (P/O PL 4.25 Item 6)
9	091N00699	IPR - Badge (XRX)
10	001N00384	MEA Unit Guide CST PA Assembly
11	–	PMO - Sheet Guide Paper (P/O PL 4.25 Item 10)
12	–	Mylar Strip (P/O PL 4.25 Item 10)
13	–	PMO - Guide Cassette Rail (P/O PL 4.25 Item 10)
14	001N00451	PMO - Dummy Base Frame
15	–	ELA HOU - Base Frame Assembly (Not Spared)
16	–	PMO - Cover Feed (Not Spared) (REP 8.4)
17	002N02280	MEA Unit - Rear Cover (REP 4.2)
18	–	Cover Rear Dummy (P/O PL 4.25 Item 17)
19	–	Cover - Main - Rear (P/O PL 4.25 Item 17)
20	002N02017	Cover Bracket Motor
21	011N00465	PMO - Lever Jam Remove
22	011N00464	PMO - CAM Jam Remove
23	–	Special Screw (Panel MFP) (Not Spared)
24	–	ELA HOU - Frame Main Assembly (REF: PL 4.15 Item 1)
25	038N00371	PMO - Guide Paper Out
26	–	Label - Guide DIMM (P/O PL 4.25 Item 17)
27	–	IPR - Guide CST Paper (P/O PL 4.25 Item 10)

NOTE: *If necessary, refer to GP 20 for the acronym list and cross reference lists of more commonly recognised part names.*

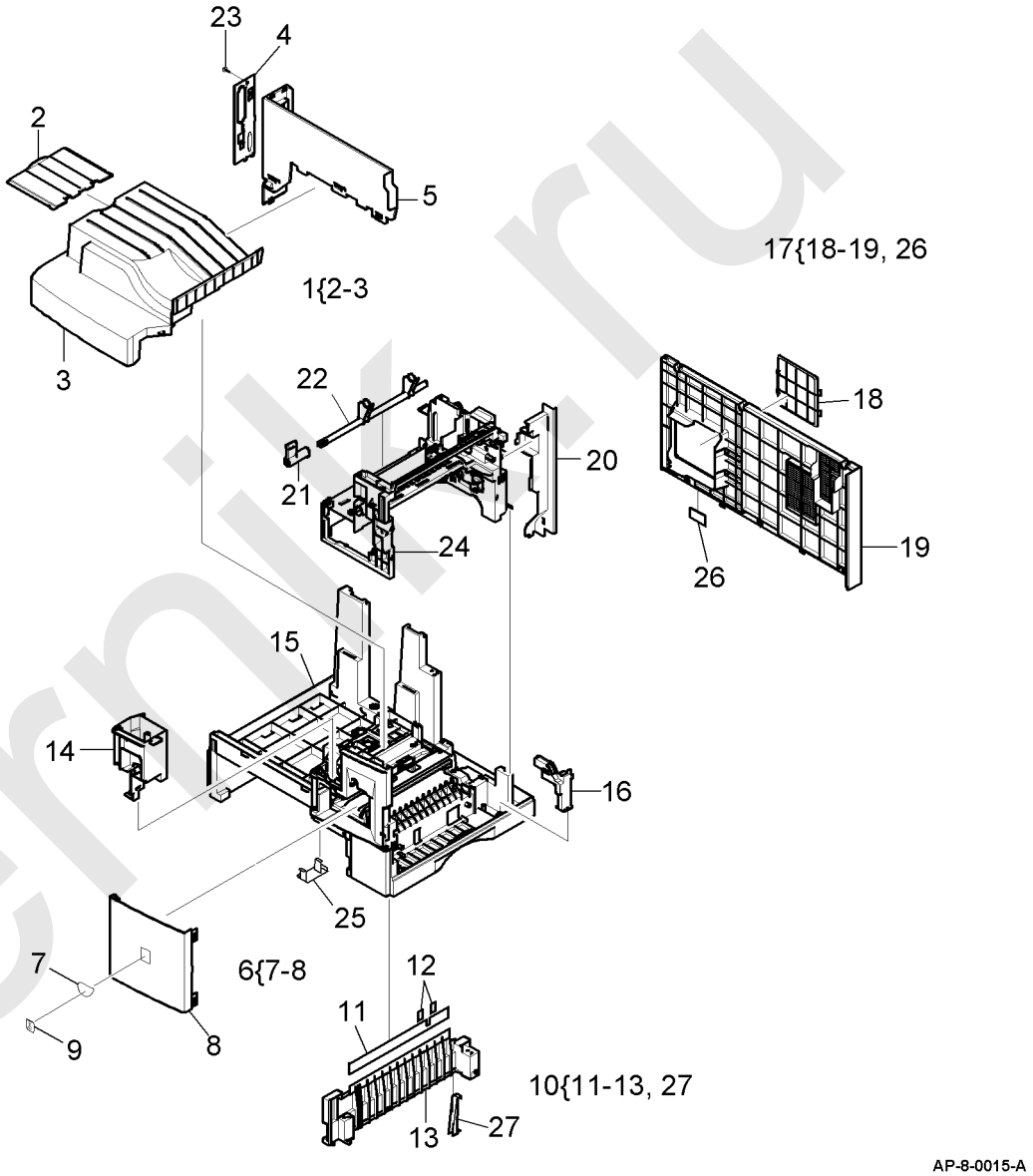

laserpik.ru

PL 5.10 DADF Assembly (1 of 5)

Item	Part	Description
1	002N02275	ELA HOU - DADF
2	002N02288	MEA Unit - Cover Open (REP 5.1)
3	–	Cover - M Open (P/O PL 5.10 Item 2)
4	–	PMO Stopper Exit (P/O PL 5.10 Item 2)
5	–	Gear - DADF 24 (A) (P/O PL 5.10 Item 2)
6	–	Roller - REGI (P/O PL 5.10 Item 2)
7	–	PMO - Lever Open (P/O PL 5.10 Item 2)
8	–	Spring ETC - Knockup, MP (P/O PL 5.10 Item 2)
9	140N62869	PBA SUB - REGI
10	–	PMO - Actuator REGI (P/O PL 5.10 Item 2)
11	–	Cover - M Sensor (P/O PL 5.10 Item 2)
12	–	Spring ETC - Torsion DOC (P/O PL 5.10 Item 2)
13	–	Bush - 6D (P/O PL 5.10 Item 2)
14	–	Ring - E (REF: PL 31.10 Item 6)
15	–	CBF Harness - LIU GND (P/O PL 5.10 Item 2)
16	–	Ground - P Duplex (P/O PL 5.10 Item 2)
17	–	Cover - M - Harness (P/O PL 5.10 Item 2)
18	050N00443	MEA Unit - TX Stacker (REP 5.1)
19	–	PMO - TX Stacker (P/O PL 5.10 Item 18)
20	–	Guide - M DOC Left (P/O PL 5.10 Item 18)
21	–	Guide - M DOC Right (P/O PL 5.10 Item 18)
22	–	IPR - Washer Spring CU (P/O PL 5.10 Item 18)
23	–	PMO - Gear Pinion (P/O PL 5.10 Item 18)
24	140N62867	PBA SUB - Length
25	120N00438	PMO - Actuator Length
26	–	PMO - TX Stacker Lower (P/O PL 5.10 Item 18)
27	–	Spring ETC - Torsion DOC (CC-F) (P/O PL 5.10 Item 18)
28	–	ELA Unit - Platen Cover (REF: PL 5.14 Item 1)
29	002N02286	Front Cover
30	002N02287	Rear Cover
31	002N02291	ELA HOU - DADF SUB (P/O PL 5.10 Item 1)

NOTE: *If necessary, refer to GP 20 for the acronym list and cross reference lists of more commonly recognised part names.*

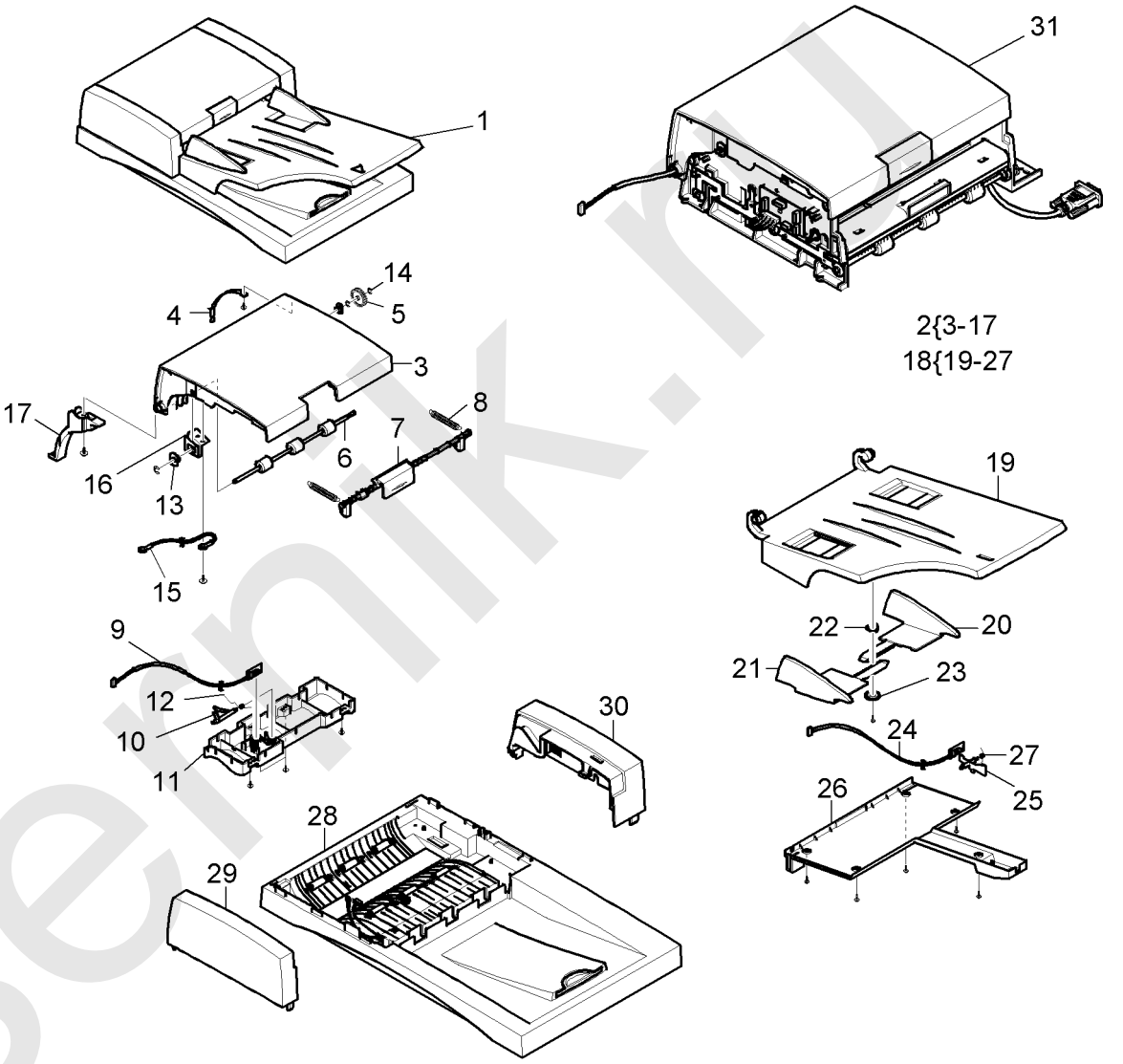

lasernik.ru

PL 5.11 DADF Assembly (2 of 5)

Item	Part	Description
1	–	Guide - M SCAN (P/O PL 5.10 Item 31)
2	–	Ground - P SCAN Roller (P/O PL 5.10 Item 31)
3	–	Ground - P Exit Roller (P/O PL 5.10 Item 31)
4	–	PBA SUB - Sensor IF (P/O PL 5.10 Item 31)
5	–	IPR - BRKT White Bar (P/O PL 5.10 Item 31)
6	–	Spring ETC - White Bar (P/O PL 5.10 Item 31)
7	–	Sheet - Guide Paper (P/O PL 5.10 Item 31)
8	–	Bush - 6D (P/O PL 5.10 Item 31)
9	–	Bracket - P - Duplex Motor (P/O PL 5.11 Item 10) (REP 5.1)
10	–	ELA HOU - Duplex Motor (P/O PL 5.10 Item 31) (REP 5.1)
11	–	ELA HOU - Cover Open Switch (P/O PL 5.10 Item 31)
12	–	Gear - DADF 24 (A) (P/O PL 5.10 Item 31)
13	–	IPR - Guard C/O S/W (P/O PL 5.10 Item 31)
14	–	MEC - Clutch Small (Registration) (P/O PL 5.10 Item 31)
15	–	Motor Step - DADF (P/O PL 5.11 Item 27)
16	–	Bracket - P - DADF Motor (P/O PL 5.11) (REP 5.1)
17	–	Cover - P Gear (P/O PL 5.10 Item 31)
18	–	Sheet - Guide Paper (P/O PL 5.10 Item 31)
19	–	PBA SUB - DADF (P/O PL 5.10 Item 31)
20	–	PMO - Actuator (P/O PL 5.10 Item 31)
21	–	PMO - Actuator Duplex (P/O PL 5.10 Item 31)
22	–	CBF Harness - Clutch IF (P/O PL 5.10 Item 31)
23	–	CBF Harness - DSUB (P/O PL 5.10 Item 31)
24	–	CBF Harness DADF GND (P/O PL 5.10 Item 31)
25	–	Shaft Gate Duplex (P/O PL 5.10 Item 31)
26	–	Motor Step - Duplex (P/O PL 5.11 Item 10)
27	–	ELA HOU - DADF Motor (P/O PL 5.10 Item 31) (REP 5.1)

NOTE: *If necessary, refer to GP 20 for the acronym list and cross reference lists of more commonly recognised part names.*

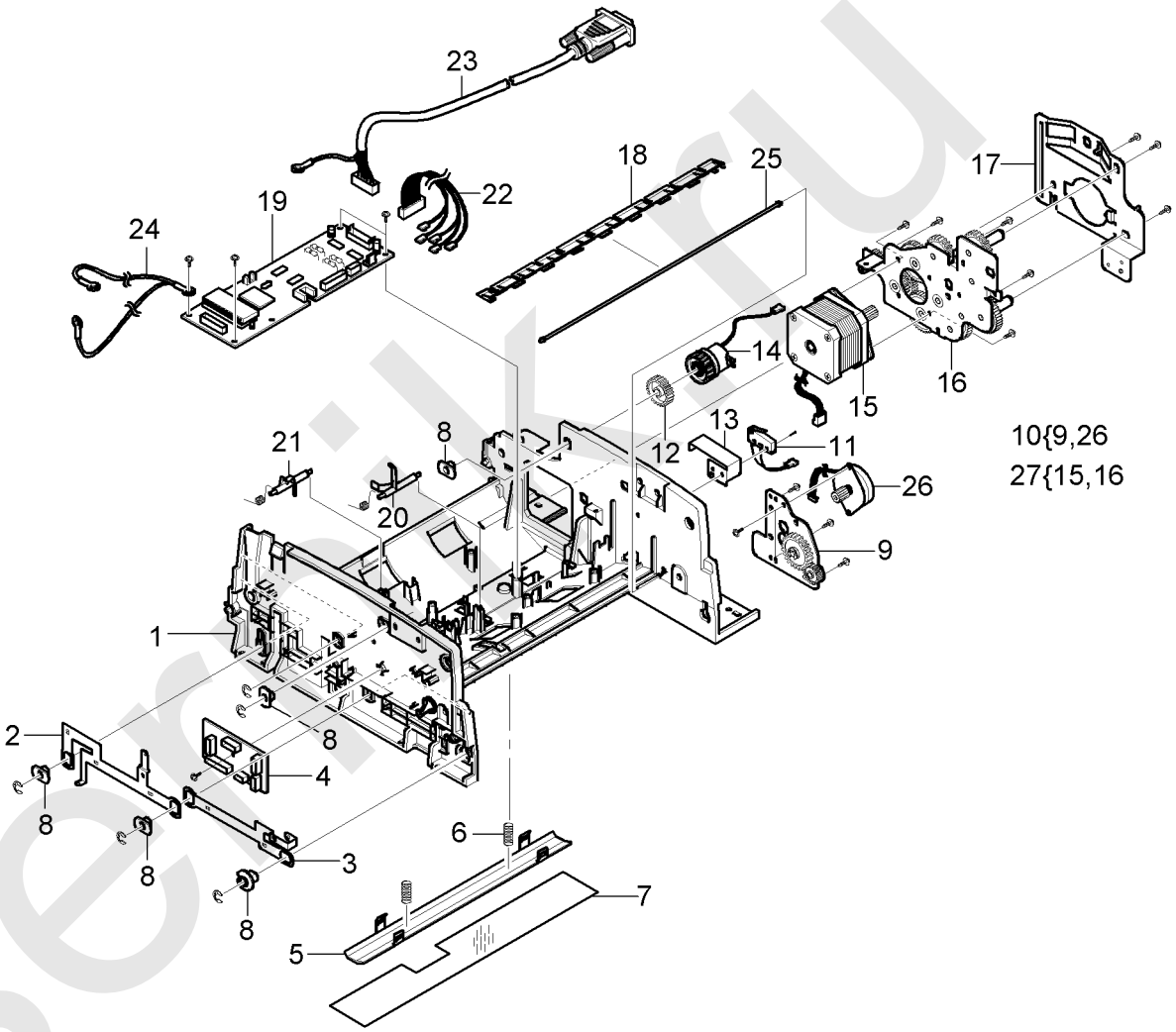

laser.ru

PL 5.12 DADF Assembly (3 of 5)

Item	Part	Description
1	–	MEA Unit - Cover Exit Assembly (P/O PL 5.10 Item 31)
2	–	Cover M Exit (P/O PL 5.12 Item 1)
3	–	Spring ETC - White BAR (P/O PL 5.12 Item 1)
4	–	PMO - Roller Idle Scan (P/O PL 5.12 Item 1)
5	–	Shaft - Exit Idle (P/O PL 5.12 Item 1)
6	–	MEC - Brush Antistatic (P/O PL 5.12 Item 1)
7	–	Ground - P - Exit Cover (P/O PL 5.12 Item 1)
8	–	Roller - Exit (P/O PL 5.10 Item 31)
9	–	Gear (P/O PL 5.10 Item 31)
10	–	Label - Cover - Exit (P/O PL 5.12 Item 1)
11	–	Guide - M Duplex Lower (P/O PL 5.10 Item 31) (REP 5.1)
12	–	Guide - M Duplex Inner (P/O PL 5.10 Item 31) (REP 5.1)
13	–	Gear - M Scan Roller (P/O PL 5.10 Item 31)
14	–	PMO - Bushing Holder (P/O PL 5.10 Item 31)
15	–	Roller - SCAN (P/O PL 5.10 Item 31)
16	–	Spring ETC Clutch (P/O PL 5.10 Item 31)
17	–	Roller - Duplex (P/O PL 5.10 Item 31)
18	–	MEC - Clutch Small (Duplex) (P/O PL 5.10 Item 31)
19	–	Bush - 6 D (P/O PL 5.10 Item 31)
20	–	Bush - 10 - D (P/O PL 5.10 Item 31)
21	–	MEA Unit Guide Duplex (P/O PL 5.10 Item 31) (REP 5.1)
22	–	Bush - 6D (L) (P/O PL 5.10 Item 31)

NOTE: *If necessary, refer to GP 20 for the acronym list and cross reference lists of more commonly recognised part names.*

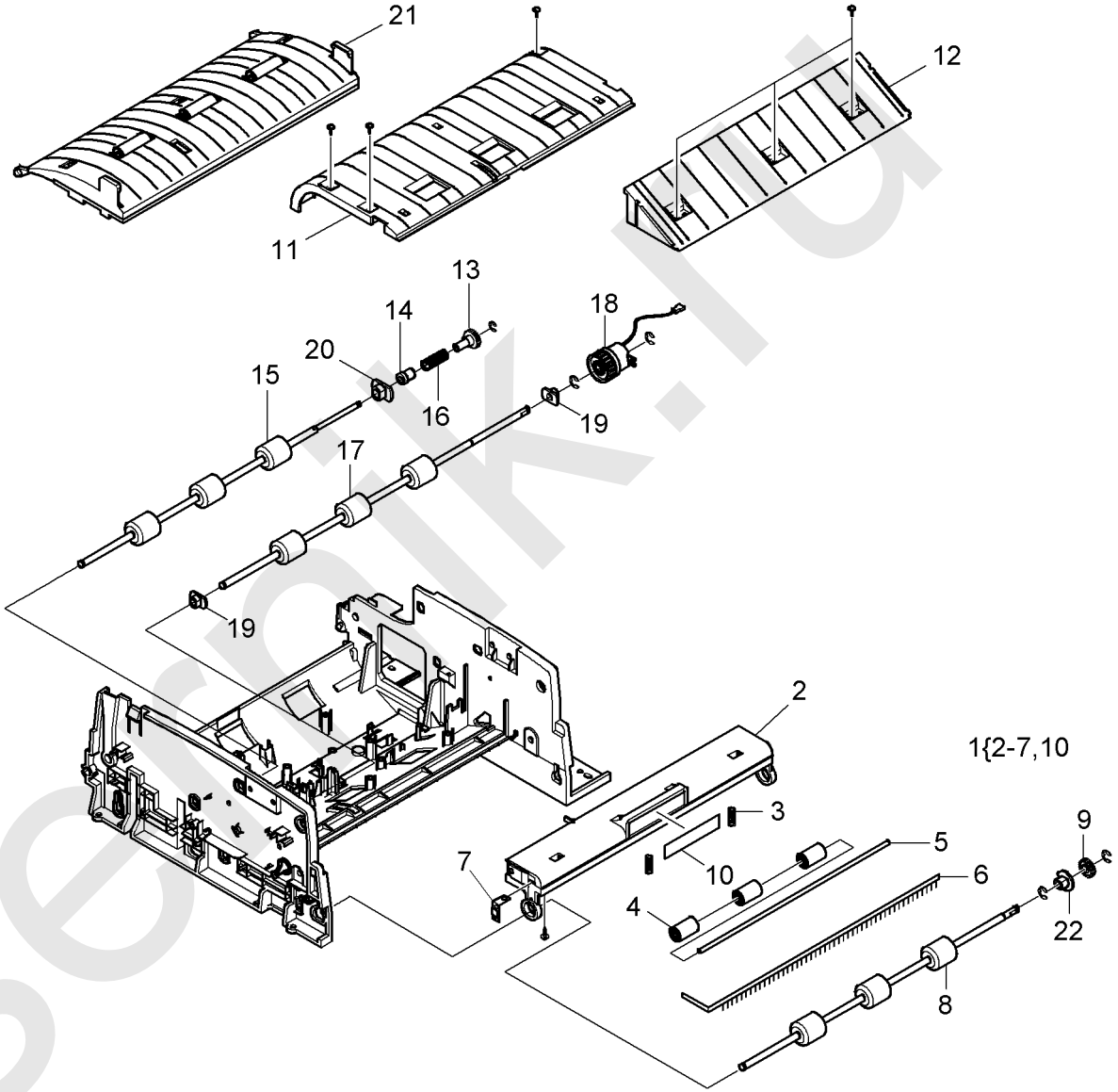

laserpik.ru

PL 5.13 DADF Assembly (4 of 5)

Item	Part	Description
1	–	MEA Unit Support Pickup Assembly (P/O PL 5.10 Item 31) (REP 5.1)
2	–	Pickup Support (P/O PL 5.13 Item 1)
3	–	Decurler (P/O PL 5.13 Item 1)
4	–	Spring (P/O PL 5.13 Item 1)
5	–	MEA Unit Guide Pickup Assembly (P/O PL 5.10 Item 31) (REP 5.1)
6	–	Guide - M Pickup Upper (P/O PL 5.13 Item 5)
7	019N00795	MEA Unit - Holder DADF Rubber
8	–	Guide - M Pickup Lower (P/O PL 5.13 Item 5)
9	–	Spring ETC - Torsion DOC (CC2 - F) (P/O PL 5.13 Item 5)
10	–	PBA SUB - DOC Width (P/O PL 5.13 Item 5)
11	–	PBA SUB - Exit Open (P/O PL 5.13 Item 5)
12	–	PMO - Actuator DOC (P/O PL 5.13 Item 5)
13	–	Spring ETC - Clutch (P/O PL 5.10 Item 31)
14	–	Bush - 10 - D (P/O PL 5.10 Item 31)
15	–	MEC - Clutch Small (Feed) (P/O PL 5.10 Item 31) (REP 5.1)
16	–	Bush 6 D (P/O PL 5.10 Item 31)
17	–	MEA Unit - Pickup (P/O PL 5.10 Item 31) (REP 5.1)
18	–	Roller Feed (P/O PL 5.10 Item 31)
19	–	PMO - Bushing Holder (P/O PL 5.10 Item 31)
20	–	Bush - M Feed Roller (P/O PL 5.10 Item 31)

NOTE: *If necessary, refer to GP 20 for the acronym list and cross reference lists of more commonly recognised part names.*

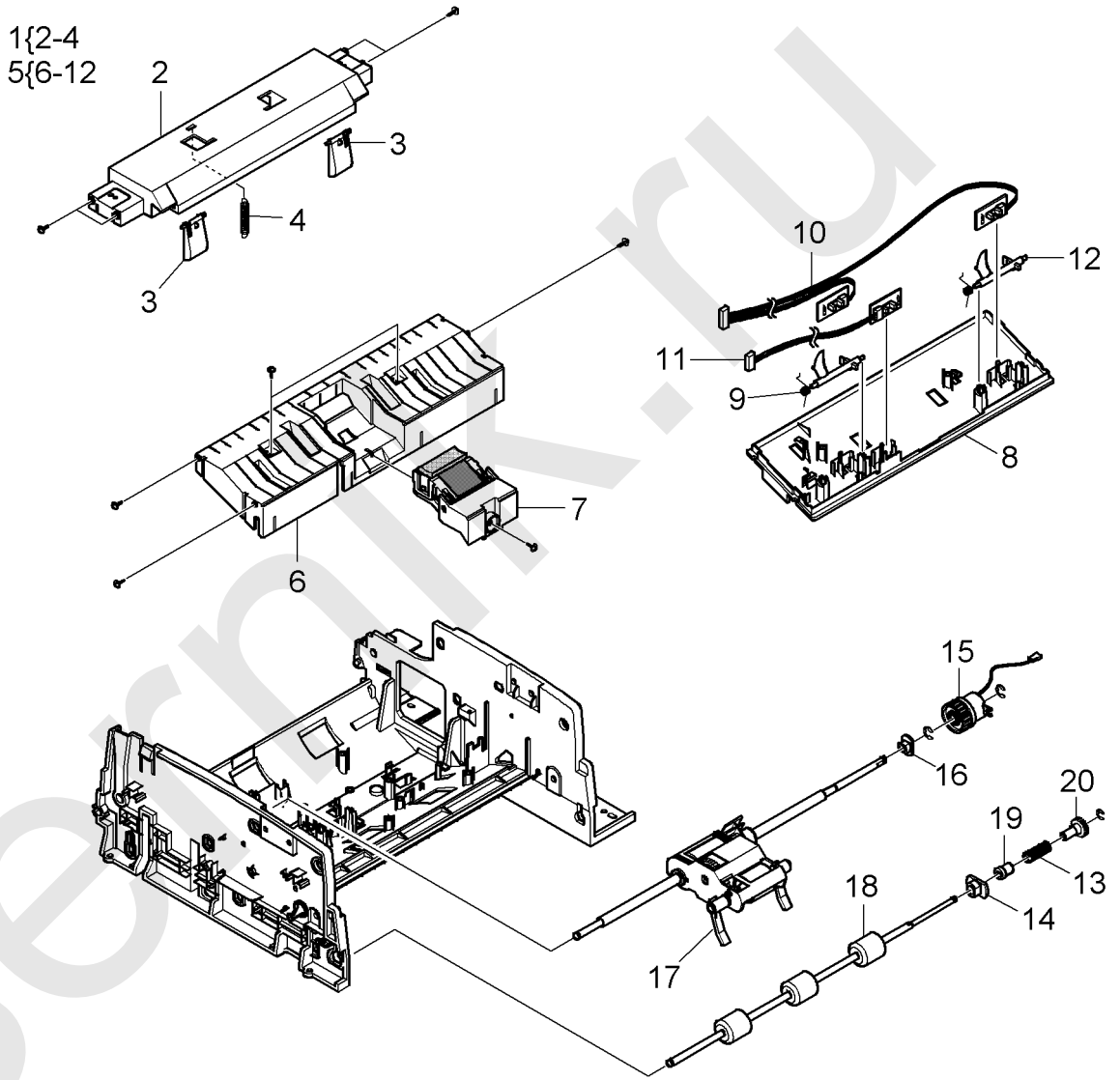

laserrnk.ru

PL 5.14 DADF Assembly (5 of 5)

Item	Part	Description
1	002N02285	ELA Unit - Platen Cover (REF: PL 5.10 Item 28)
2	–	PMO - Cover Platen (C) (P/O PL 5.14 Item 1)
3	–	PMO - Extension Platen (P/O PL 5.14 Item 1)
4	–	Guide - M Extension (P/O PL 5.14 Item 1)
5	025N00081	DADF Document Cushion
6	–	IPR - P Pinch (Scan) (P/O PL 5.14 Item 1)
7	006N01241	Shaft - Pinch
8	022N01511	PMO - Roll Pinch
9	130N01201	PMO - Actuator Sensor SCAN
10	140N62868	PBA SUB - GATE
11	003N00939	MEA Unit - Hinge Assembly
12	–	Plate - P - Dummy Platen (P/O PL 5.14 Item 1)
13	–	Spring ETC - Charge (P/O PL 5.14 Item 1)
14	–	Spring ETC - Torsion DOC (P/O PL 5.14 Item 1)

NOTE: *If necessary, refer to GP 20 for the acronym list and cross reference lists of more commonly recognised part names.*

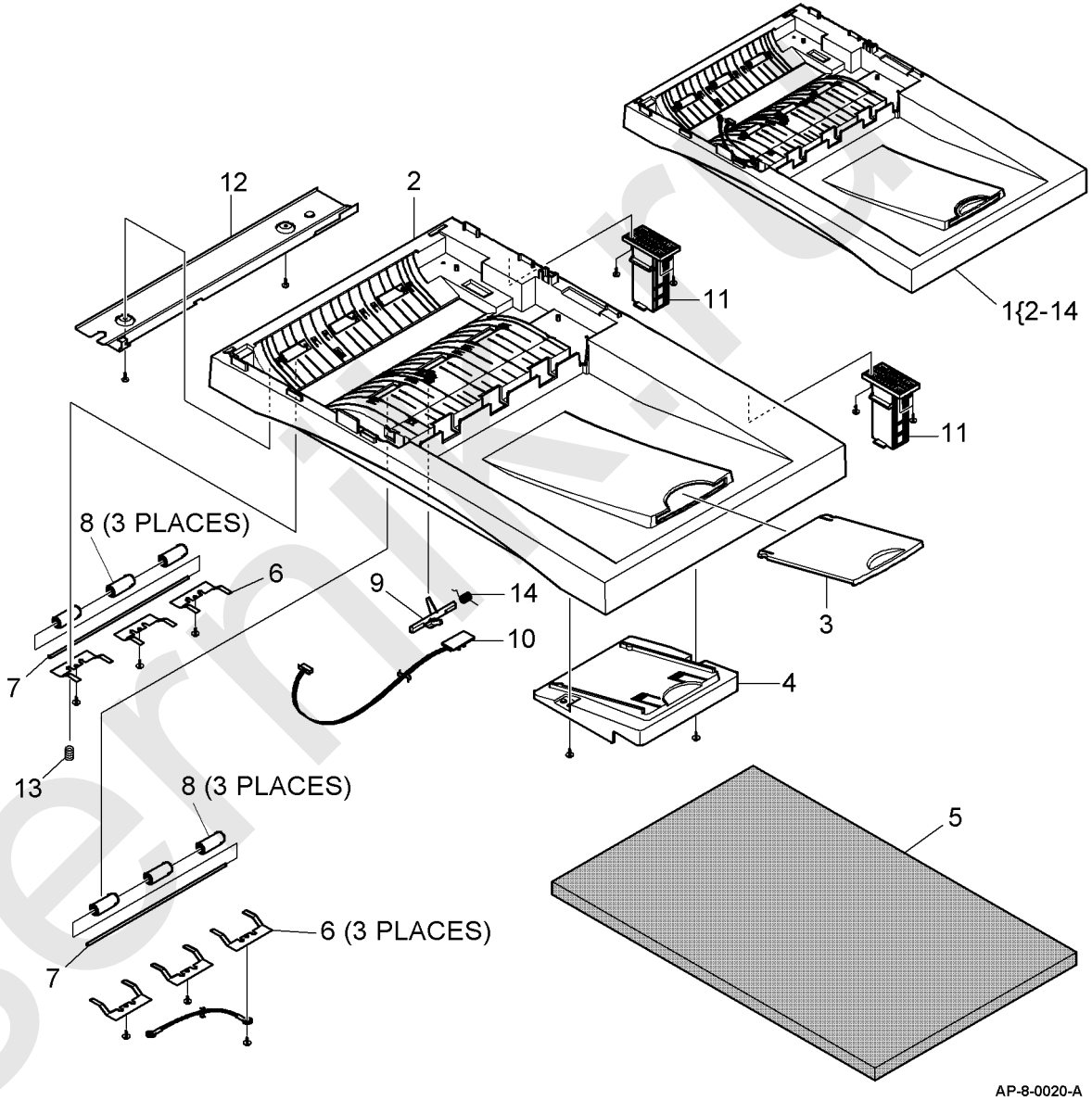

laserman.ru

PL 6.10 LSU

Item	Part	Description
1	122N00234	Unit - LSU (REP 6.1)
2	152N11549	CBF Harness - LSU
3	–	Fan DC (Cardinal) (REF: PL 4.10 Item 17)

NOTE: *If necessary, refer to GP 20 for the acronym list and cross reference lists of more commonly recognised part names.*

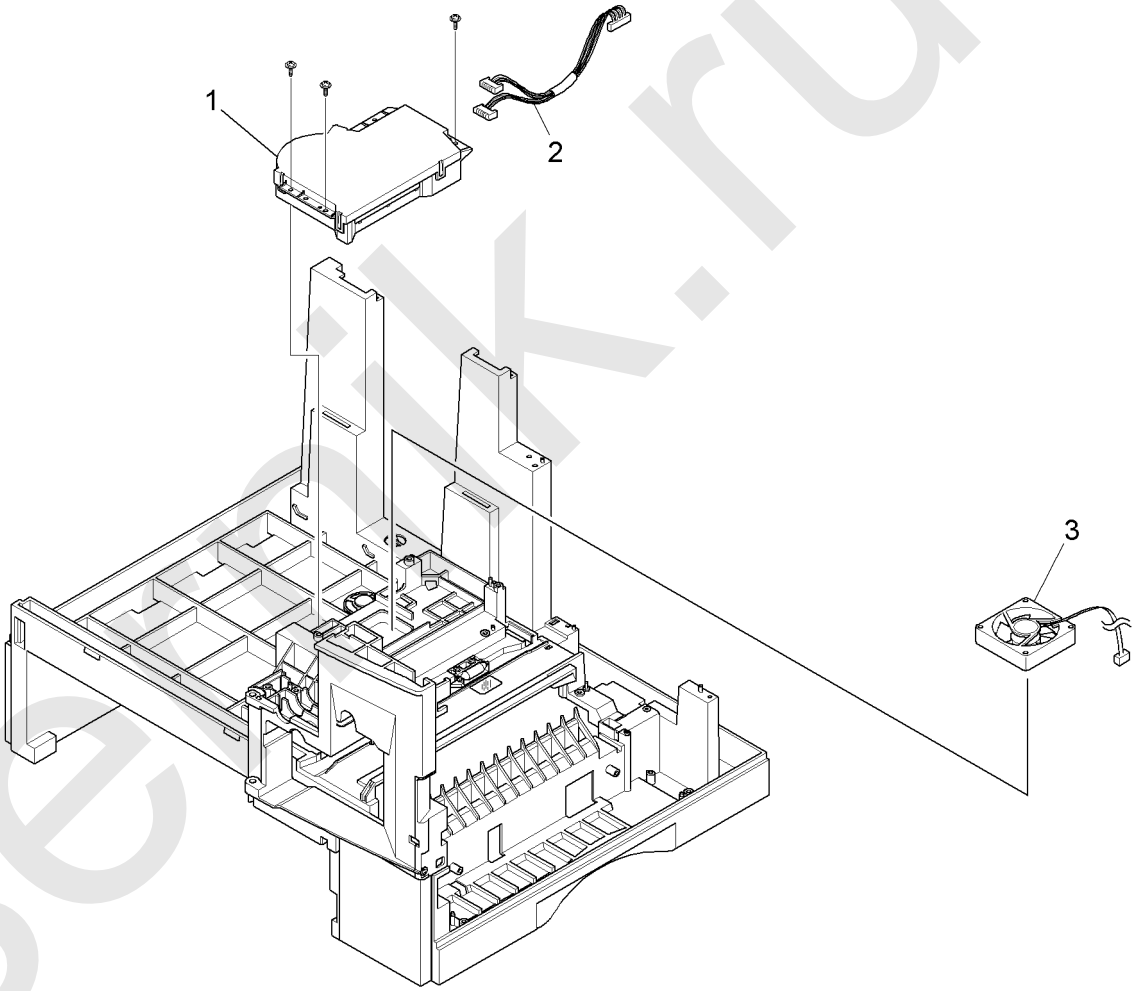

AP-8-0012-A

laserrik.ru

PL 7.10 Tray 1 Cassette Assembly

Item	Part	Description
1	050N00442	Mec - Cassette Assembly (A4)
–	050N00441	Mec- Cassette Assembly (Letter)
2	–	Plate Guide Paper (P/O PL 7.10 Item 1)
3	–	IPR - Plate K/UP (P/O PL 7.10 Item 1)
4	–	IPR Finger Right (P/O PL 7.10 Item 1)
5	–	PMO - Cover Cassette (P/O PL 7.10 Item 1)
6	–	PMO - Frame Cassette (P/O PL 7.10 Item 1)
7	–	Guide Front CST Plus (P/O PL 7.10 Item 1)
8	–	PMO - Guide Rear (P/O PL 7.10 Item 1)
9	–	Guide Side CST (P/O PL 7.10 Item 1)
10	–	PMO - Locker Plate (P/O PL 7.10 Item 1)
11	–	Pad - CST Plus (P/O PL 7.10 Item 1)
12	–	Spring - Locker Plate (P/O PL 7.10 Item 1)
13	009N01465	Spring CS RE
14	009N01466	Spring CS FR
15	091N80204	Label (R) - Instruction CST Plus
16	091N80205	Label (R) - Height CST
17	–	Guide Side Handle (P/O PL 7.10 Item 1)
18	–	IPR Finger Left (P/O PL 7.10 Item 1)
19	–	PMO - Bushing Finger F (P/O PL 7.10 Item 1)
20	–	Washer Plain (REF: PL 31.10 Item 6)
21	–	Spring White Bar (P/O PL 7.10 Item 1)
22	–	Guide Sub Wall (P/O PL 7.10 Item 1)

NOTE: *If necessary, refer to GP 20 for the acronym list and cross reference lists of more commonly recognised part names.*

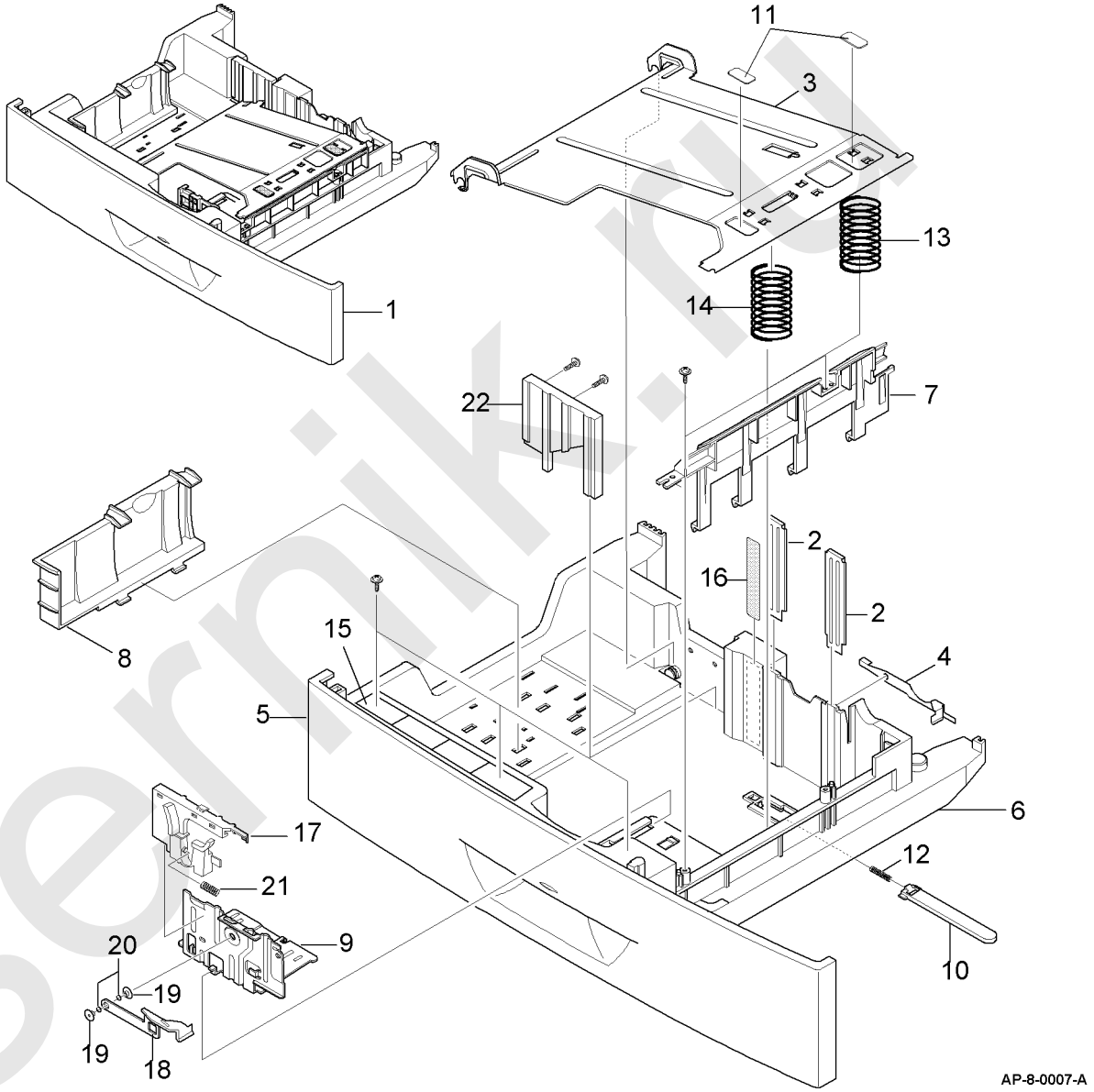

laserrnik.ru

PL 7.15 Tray 2 Cassette Assembly (1 of 2)

Item	Part	Description
1	–	ELA Unit - SCF (MC2) (REF: PL 31.10 Item 3)
2	–	PMO - Cover Top SCF (Not Spared)
3	–	ELA HOU - Upper SCF2 (Not Spared)
4	–	PMO - Guide Paper Upper SCF (Not Spared)
5	–	Shaft - Pickup CST (Not Spared)
6	–	Shaft - Pickup SUB (Not Spared)
7	–	PMO - Bearing Shaft (Not Spared)
8	–	Gear - Pickup (Not Spared)
9	022N01600	Rubber - Roller Pickup
10	130N01337	Rubber - Roller Pickup S
11	–	PMO - Bushing P/U MP (Not Spared)
12	120N00393	PMO - M - Actuator No Paper
13	–	Housing - M - Pickup Large (Not Spared)
14	–	Housing - M - Pickup Small (Not Spared)
15	–	Gear - Feed (SCF) (Not Spared)
16	–	Ring - E ID4 (REF: PL 31.10 Item 6)
17	–	RING - E ID5 (REF: PL 31.10 Item 6)
18	–	Feed Roller SCF MC2 (Not Spared)
19	–	ICT - Pin ADF (Not Spared)
20	–	Ground Plate SCF (Not Spared)
21	–	CBF Harness GND Star Wheel (Not Spared)
22	–	PBA SUB - Exit SEN (Not Spared)
23	–	PMO - Base Frame - SCF (REF: PL 7.16 Item 2)

NOTE: *If necessary, refer to GP 20 for the acronym list and cross reference lists of more commonly recognised part names.*

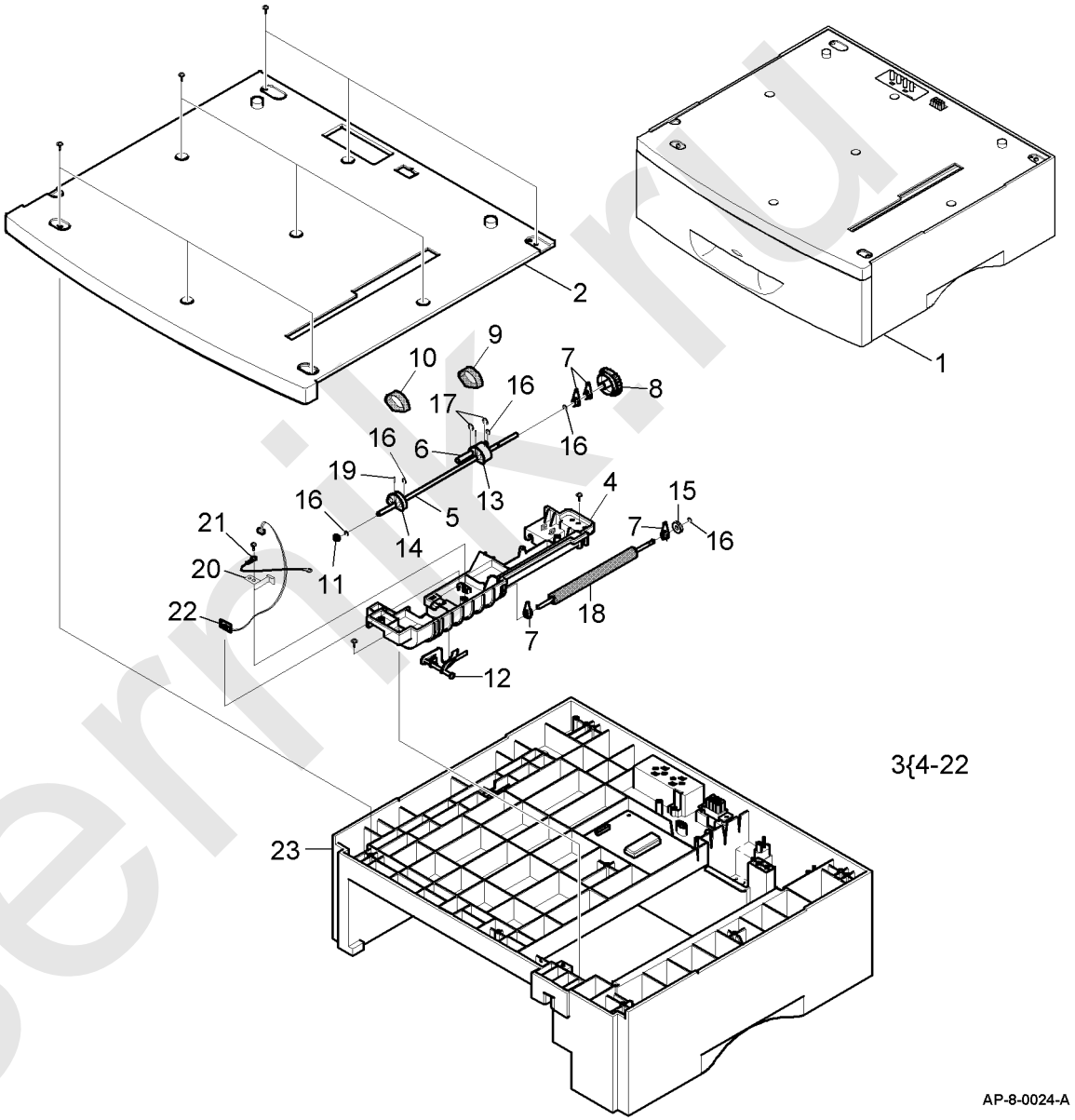

laserrik.ru

PL 7.16 Tray 2 Cassette Assembly (2 of 2)

Item	Part	Description
1	–	ELA HOU - Frame - SCF (MC2) (Not Spared)
2	–	PMO - Base Frame - SCF (Not Spared)
3	140N62874	PBA SCF
4	152N01992	CBF Harness - SCF 8P
5	–	CAM Catch (Not Spared)
6	006N01184	ICT - Shaft HV Large
7	009N01410	Spring ETC - HV Large
8	015N00486	IPR - Plate Ground (A)
9	–	Foot (Not Spared)
10	–	MEA Unit - Lower SCF2 (Not Spared)
11	–	PMO - Guide Paper Lower (Not Spared)
12	–	PMO - Holder Idle Roll 16 (Not Spared)
13	–	PMO - Roller Idle (SCF) (Not Spared)
14	–	PMO - Bush Idle Roll - SCF16 (Not Spared)
15	–	Spring ETC - Pad (Not Spared)
16	–	MEA Unite-Cassette (Not Spared)
17	–	ELA HOU - Solenoid SCF2 (Not Spared)
18	–	Solenoid Pickup (Not Spared)
19	–	Bracket Clutch SCF (Not Spared)
20	–	ELA HOU - Motor SCF2 (Not Spared)
21	–	Bracket SCF Motor (Not Spared)
22	–	SCF Gear 41/23 (Not Spared)
23	–	OPC Gear 53/37 (Not Spared)
24	–	SCF Gear 53/31 (Not Spared)
25	–	Motor Step - SCF (2K) (Not Spared)
26	–	Ring - E (REF: PL 31.10 Item 6)
27	–	CBF Harness SCF (Not Spared)
28	–	CBF Harness - GND (Not Spared)

NOTE: *1. If necessary, refer to GP 20 for the acronym list and cross reference lists of more commonly recognised part names.*

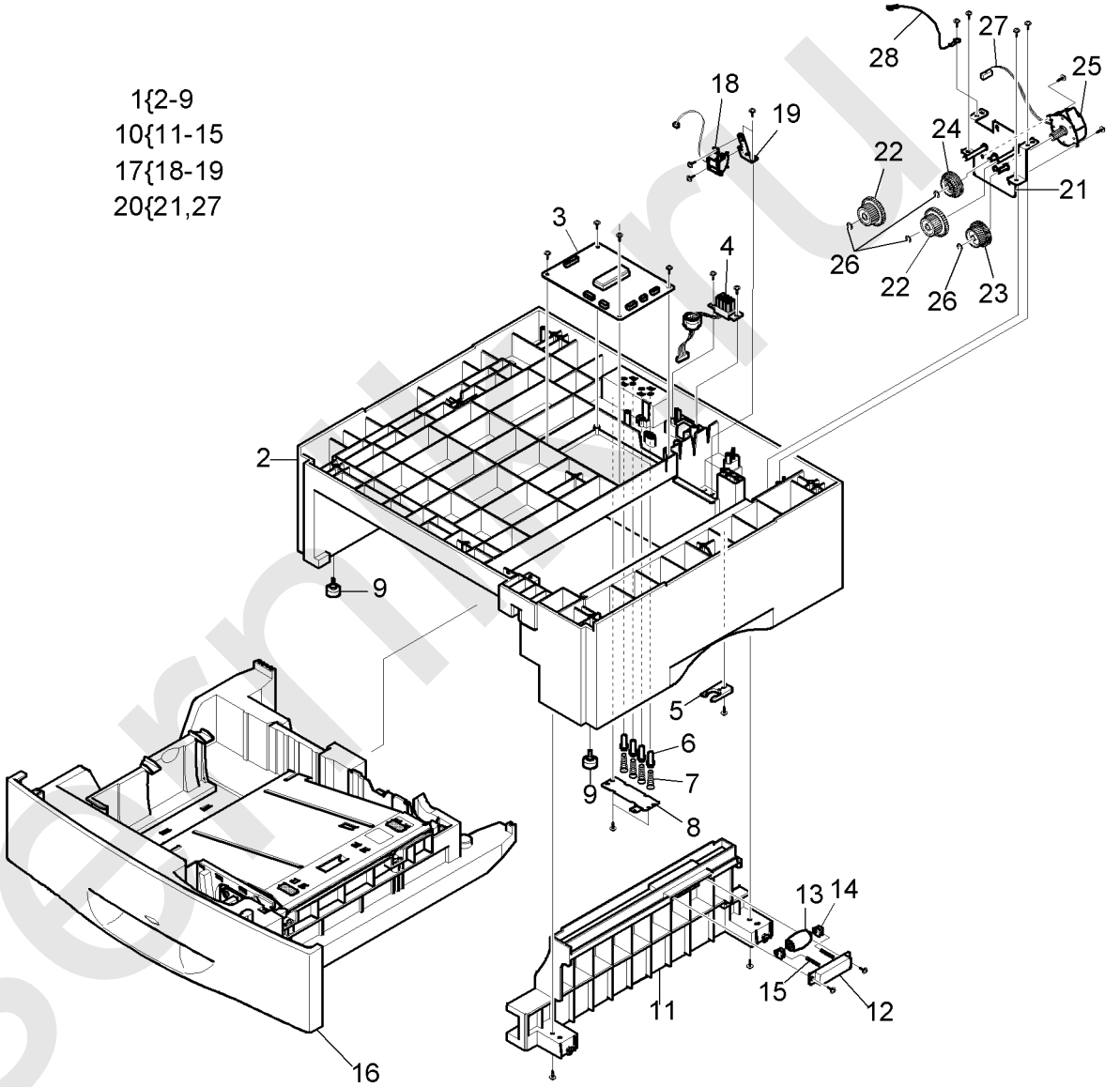

laserman

PL 8.10 Side Cover Assembly (1 of 2)

Item	Part	Description
1	–	ELA HOU - Side Cover Assembly (Not Spared)
2	022N02057	MEA Unit - Duplex Assembly (REP 8.2)
3	–	Ring - CS (REF: PL 31.10 Item 6)
4	–	Gear - Dup Idler 17 (see NOTE 2)
5	–	Gear - MP/DUP DRV (see NOTE 2)
6	–	Spring Feed (see NOTE 2)
7	–	PMO - Bushing Feed (see NOTE 2)
8	–	PMO - Bushing TX(B4) (see NOTE 2)
9	–	PMO - Shaft DUP Driver (see NOTE 2)
10	–	RPR - Rubber Exit (see NOTE 2)
11	–	IPR - BRKT G DUP (see NOTE 2)
12	–	PMO - Roller Exit (see NOTE 2)
13	–	Spring Fuser Exit (see NOTE 2)
14	–	PMO - GP Lower DP (see NOTE 2)
15	–	PMO - Feed Frame (see NOTE 2)
16	–	IPR - Bracket Guide B (see NOTE 2)
17	–	CBF Harness - OPE GND (see NOTE 2)
18	–	IPR - BRKT Ground B (see NOTE 2)
19	–	IPR - BRKT Ground A (see NOTE 2)
20	–	IPR - BRKT Ground TR (see NOTE 2)
21	–	PMO - Holder Saw (see NOTE 2)
22	–	IPR - Plate saw (see NOTE 2)
23	–	IPR - BRKT Guide A (see NOTE 2)
24	009N01363	MEA Unit - Hold Gear
25	–	PMO - Bush (P/O PL 8.10 Item 24)
26	–	Spring ETC - TRR (P/O PL 8.10 Item 24)
27	–	PMO - Holder Gear TR (P/O PL 8.10 Item 24)
28	–	MEA Unit - Hold TR GND (Not Spared)
29	–	PMO - Bush (P/O PL 8.10 Item 28)
30	–	Spring ECT - TR (P/O PL 8.10 Item 28)
31	–	Spring ETC - Plate TR (P/O PL 8.10 Item 28)
32	–	PMO - Holder GND TR (P/O PL 8.10 Item 28)
33	022N01475	Transfer Roller
34	007N01114	Gear Transfer

NOTE: *1. If necessary, refer to GP 20 for the acronym list and cross reference lists of more commonly recognised part names.*

NOTE: *2. Part of PL 8.10 Item 2.*

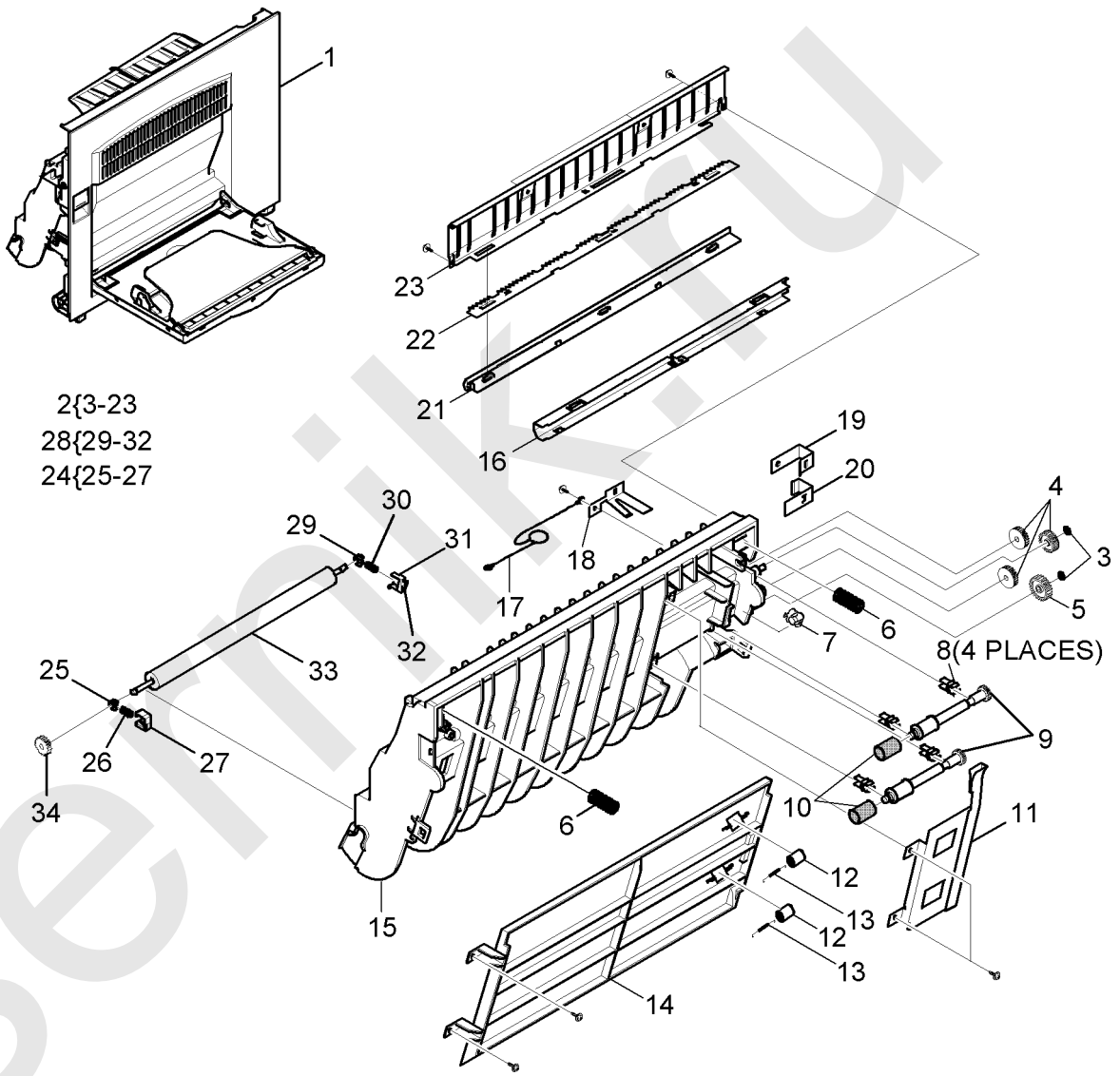

lasermik.ru

PL 8.11 Side Cover Assembly (2 of 2)

Item	Part	Description
1	050N00445	MEA Unit - Side SUB Assembly
2	–	PMO - Guide DP Side (P/O PL 8.11 Item 1)
3	–	Guide Side Push (P/O PL 8.11 Item 1)
4	–	PMO - Locker Open (P/O PL 8.11 Item 1)
5	–	PMO - Locker Side R (P/O PL 8.11 Item 1)
6	–	Spring - Locker Torsion (P/O PL 8.11 Item 1)
7	–	PMO - Tie Stopper (P/O PL 8.11 Item 1)
8	–	MEA Unit - Tray Assembly (P/O PL 8.11 Item 1) (REP 7.1)
9	–	PMO - Tray Case, MP (P/O PL 8.11 Item 8)
10	–	PMO - Side Exit, MP (P/O PL 8.11 Item 8)
11	–	PMO - Side Guide, MP (P/O PL 8.11 Item 8)
12	–	PMO - Tray Cover, MP (P/O PL 8.11 Item 8)
13	–	IPR - Guide Latch, MP (P/O PL 8.11 Item 8) (REP 8.3)
14	–	PMO - Tray Link, MP (P/O PL 8.11 Item 8)
15	–	Label (R) - Height, MP (P/O PL 8.11 Item 8)

NOTE: *If necessary, refer to GP 20 for the acronym list and cross reference lists of more commonly recognised part names.*

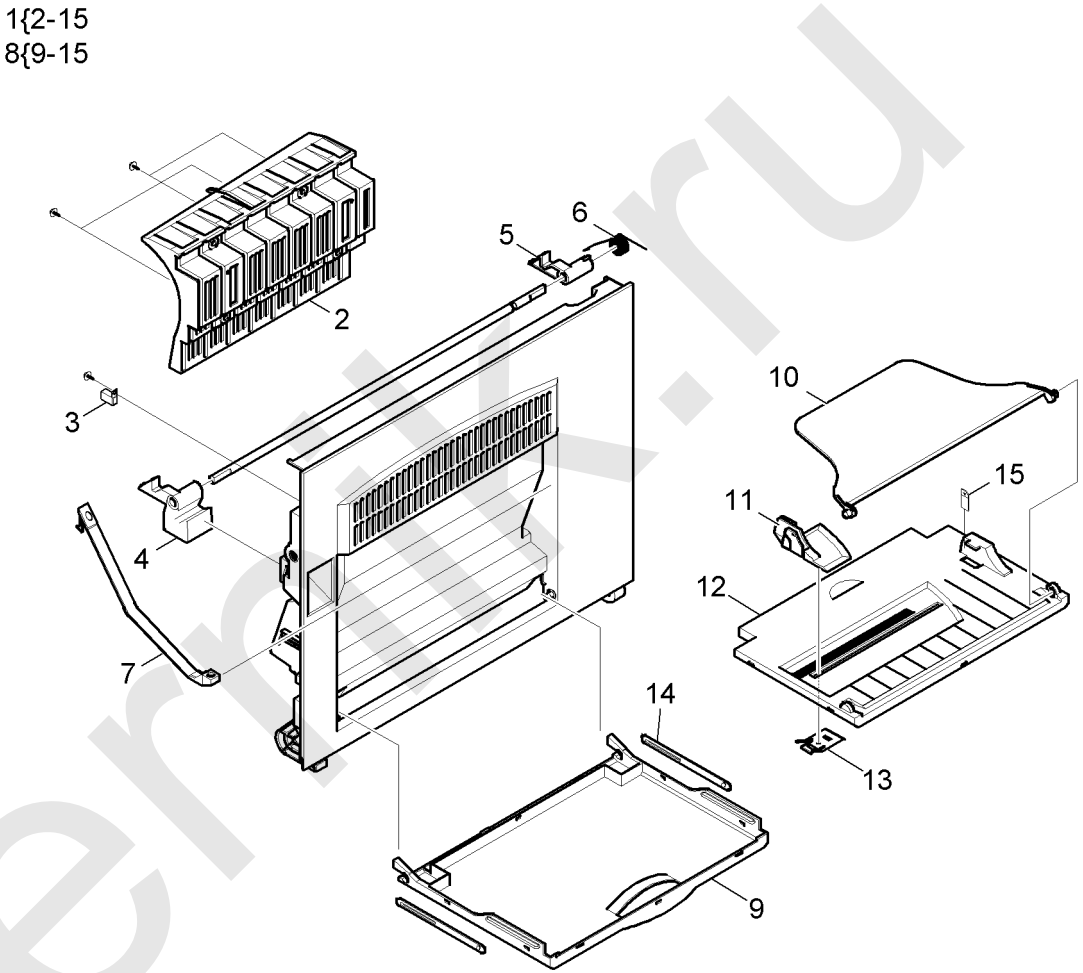

laserfix.ru

PL 8.15 Feeder Assembly

Item	Part	Description
1	022N02056	MEA Unit - Feed Roller Assembly (REP 8.5)
2	–	PMO - Frame Feed (P/O PL 8.15 Item 1)
3	–	Gear - Feed (P/O PL 8.15 Item 1)
4	–	Gear - MP/DUP DRV (P/O PL 8.15 Item 1)
5	–	ICT - Shaft Feed (P/O PL 8.15 Item 1)
6	–	PMO - Bushing P/U, MP (P/O PL 8.15 Item 1)
7	–	Ring - E (P/O PL 8.15 Item 1)
8	–	Ring - CS (P/O PL 8.15 Item 1)
9	–	PMO - BRKT Feed (P/O PL 8.15 Item 1)
10	022N01470	PMO - Roller Feed
11	–	PMO - Holder Pinch C (P/O PL 8.15 Item 1)
12	–	PMO - Holder Pinch SUB (P/O PL 8.15 Item 1)
13	–	PMO - Roller Feed L (P/O PL 8.15 Item 1)
14	–	Holder Push Feed CST (P/O PL 8.15 Item 1)
15	–	PMO - Holder Pinch M (P/O PL 8.15 Item 1)
16	–	PMO - SUB Holder Feed (P/O PL 8.15 Item 1)
17	–	Washer - Plain (P/O PL 8.15 Item 1)
18	–	PMO - Roller Feed S (P/O PL 8.15 Item 1)
19	–	IPR - Shaft Feed Idler (P/O PL 8.15 Item 1)
20	–	Sheet Feed (P/O PL 8.15 Item 1)
21	–	Spring - Feed MP Feed (P/O PL 8.15 Item 1)
22	–	PMO Roller Pinch Feed (P/O PL 8.15 Item 1)
23	–	E - Clip (P/O PL 8.15 Item 1)

NOTE: *If necessary, refer to GP 20 for the acronym list and cross reference lists of more commonly recognised part names.*

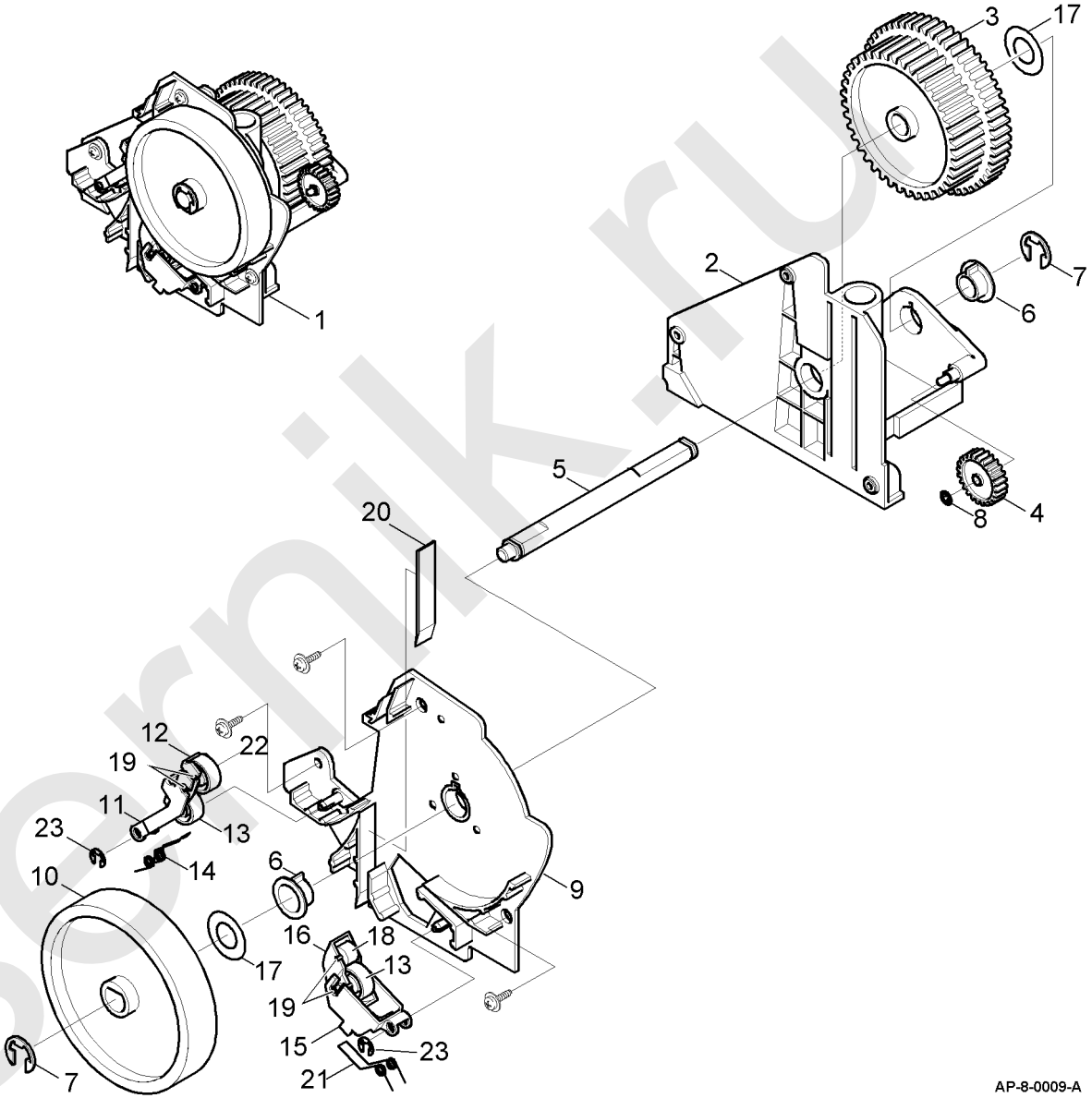

lasernik.ru

PL 8.20 MP Assembly

Item	Part	Description
1	600N01741	ELA HOU - MP Assembly (REP 8.4)
2	013N00515	PMO - Bushing Pickup, MP
3	–	Ring - E (REF: PL 31.10 Item 6)
4	–	Solenoid - MP (P/O PL 8.20 Item 1)
5	009N01364	Spring - Cam MP
6	–	Spring - Pickup, MP (P/O PL 8.20 Item 1)
7	009N01365	Spring - Knockup, MP
8	–	IPR - Bracket Solenoid (P/O PL 8.20 Item 1)
9	–	PMO - Holder Cam (P/O PL 8.20 Item 1)
10	–	PMO - Gear P/U MPF (P/O PL 8.20 Item 1)
11	–	PMO - Roller Cam, MP (P/O PL 8.20 Item 1)
12	120N00392	PMO - Actuator, MP
13	022N01479	PMO - Adjuster, MP
14	–	PMO - Cam Pickup, MP
15	–	PMO - Frame, MP (P/O PL 8.20 Item 1)
16	019N00613	PMO - Holder Pad, MP
17	130N01206	PMO - Holder Sensor, MP
18	–	PMO - Housing Pickup, MP (P/O PL 8.20 Item 27)
19	–	PMO - Plate Knockup, MP (P/O PL 8.20 Item 1)
20	013N00516	PMO - Idle Pickup, MP
21	130N01338	RPR - Rubber Pickup, MP
22	019N00612	RPR - RCT - Pad Pickup, MP
23	019N00796	RPR - Pad MP Plus
24	130N01203	PBA SUB - MP SEN
25	–	Screw - Taptite (REF: PL 31.10 Item 6)
26	–	Screw - Taptite (REF: PL 31.10 Item 6)
27	022N01483	A/S Material-Pickup, MP

NOTE: *If necessary, refer to GP 20 for the acronym list and cross reference lists of more commonly recognised part names.*

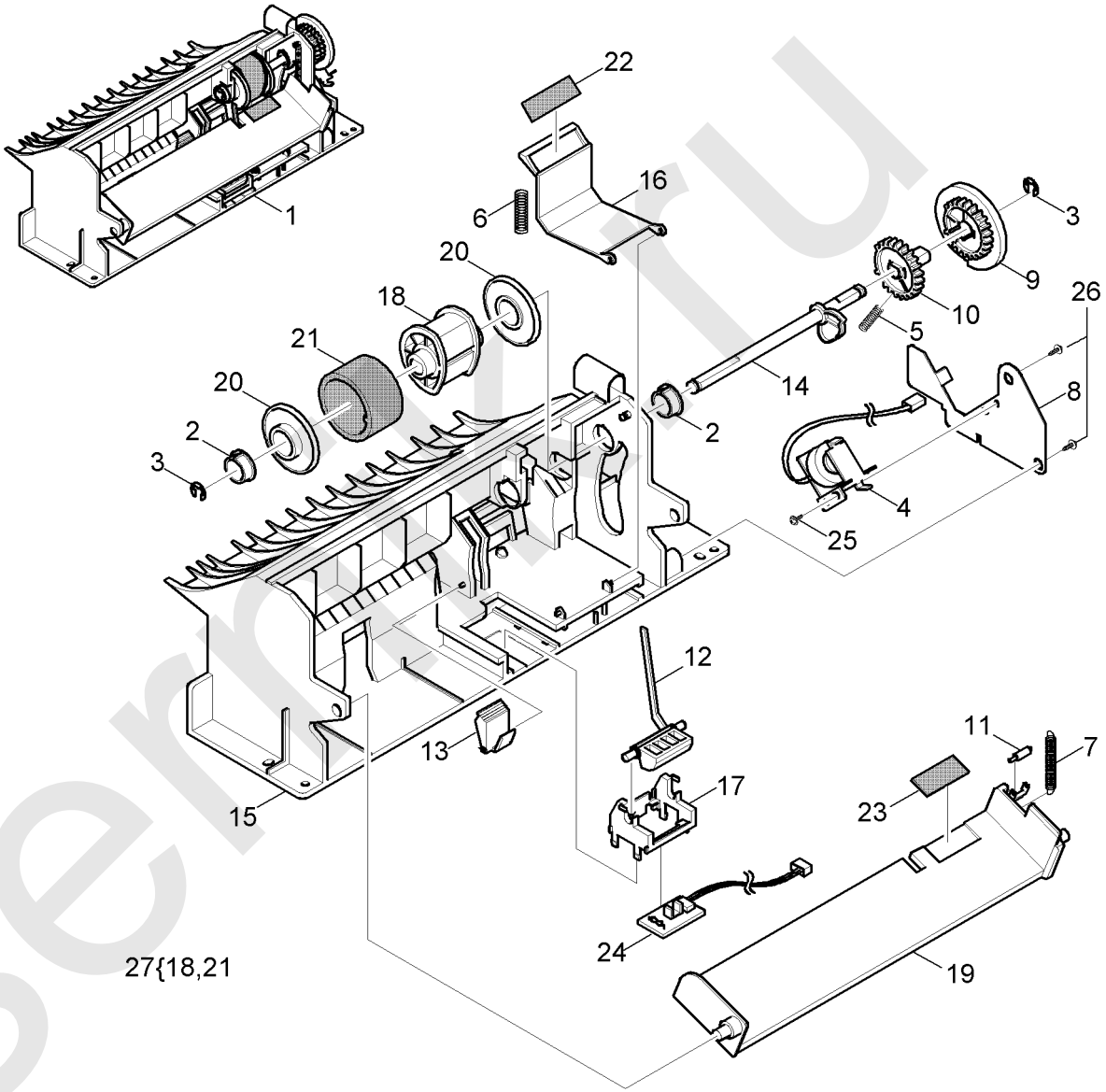

laserpr.ru

PL 8.25 Pickup Assembly

Item	Part	Description
1	002N02276	ELA HOU - Pickup Assembly (REP 8.6)
2	–	IPR - GND Feed (P/O PL 8.25 Item 1)
3	–	IPR - GND Input (P/O PL 8.25 Item 1)
4	–	IPR - Guide Input (P/O PL 8.25 Item 1)
5	130N01207	PBA SUB - Toner TX
6	140N05940	PBA Sub - PTL
7	–	PMO - Actuator Feed Sensor (P/O PL 8.25 Item 1)
8	–	PMO - Guide Paper (P/O PL 8.25 Item 1)
9	–	PMO - Holder Sensor Feed (P/O PL 8.25 Item 1)
10	–	PMO - Lens Toner Sensor (P/O PL 8.25 Item 1)
11	–	PMO - PTL Path (P/O PL 8.25 Item 1)
12	130N01204	PBA SUB - Feed & P.EMP SEN
13	–	PMO - Bushing P/U,MP (P/O PL 8.25 Item 1)
14	–	Housing - Pickup Large (P/O PL 8.25 Item 1)
15	–	Housing - Pickup Small (P/O PL 8.25 Item 1)
16	022N01600	RPR Rubber Pickup
17	130N01337	Rubber Pickup Small
18	–	Shaft - Pickup CST (P/O PL 8.25 Item 1)
19	–	Shaft Pin ADF (P/O PL 8.25 Item 1)
20	–	Sheet - PTL Path (P/O PL 8.25 Item 1)
21	–	Shaft - SUB - Pickup (P/O PL 8.25 Item 1)
22	–	Ring - E ID4 (REF: PL 31.10 Item 6)
23	–	Ring - E ID5 (REF: PL 31.10 Item 6)
24	–	PMO - Bearing Shaft (Not Spared)
25	120N00393	PMO - Actuator No Paper
26	007N01193	Gear Pickup

NOTE: *If necessary, refer to GP 20 for the acronym list and cross reference lists of more commonly recognised part names.*

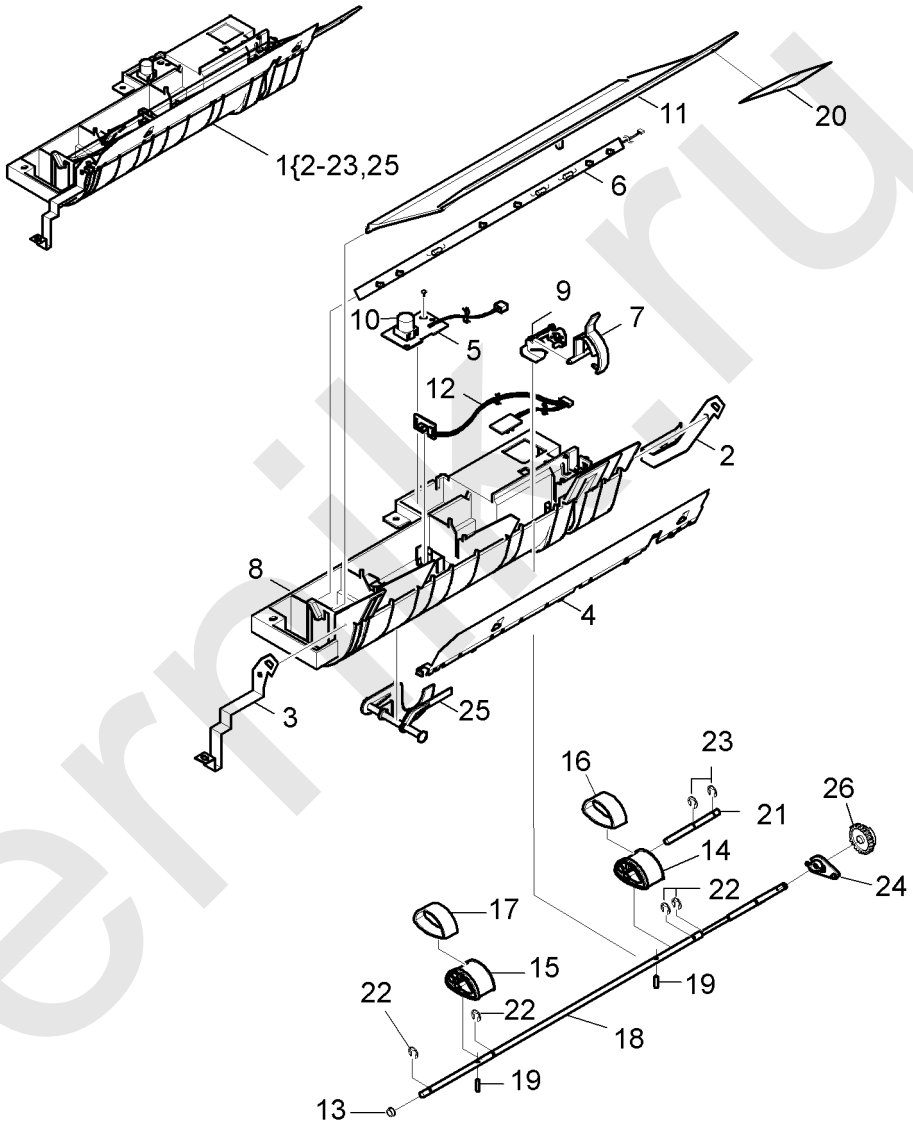

AP-8-0011-A

laserrik.ru

PL 9.10 Toner, Drum Cartridge & Fuser

Item	Part	Description
1	113R00671	ELA Unit - OPE Drum Set
2	106R01048	ELA - Toner Unit Set (XE)
–	106R01047	ELA - Toner Unit Set (NASG/XCL)
3	007N01118	PMO Lock Drive
4	002N02278	ELA HOU - Fuser Assembly (XE) (REP 10.1)
–	002N02277	ELA HOU - Fuser Assembly (NASG/XCL) (REP 10.1)
5	–	ELA HOU - Drives Assembly (REF: PL 4.20 Item 1)
6	–	PBA Bias (Not Spared)
7	–	Cover Sheet Connector (Not Spared)

NOTE: *If necessary, refer to GP 20 for the acronym list and cross reference lists of more commonly recognised part names.*

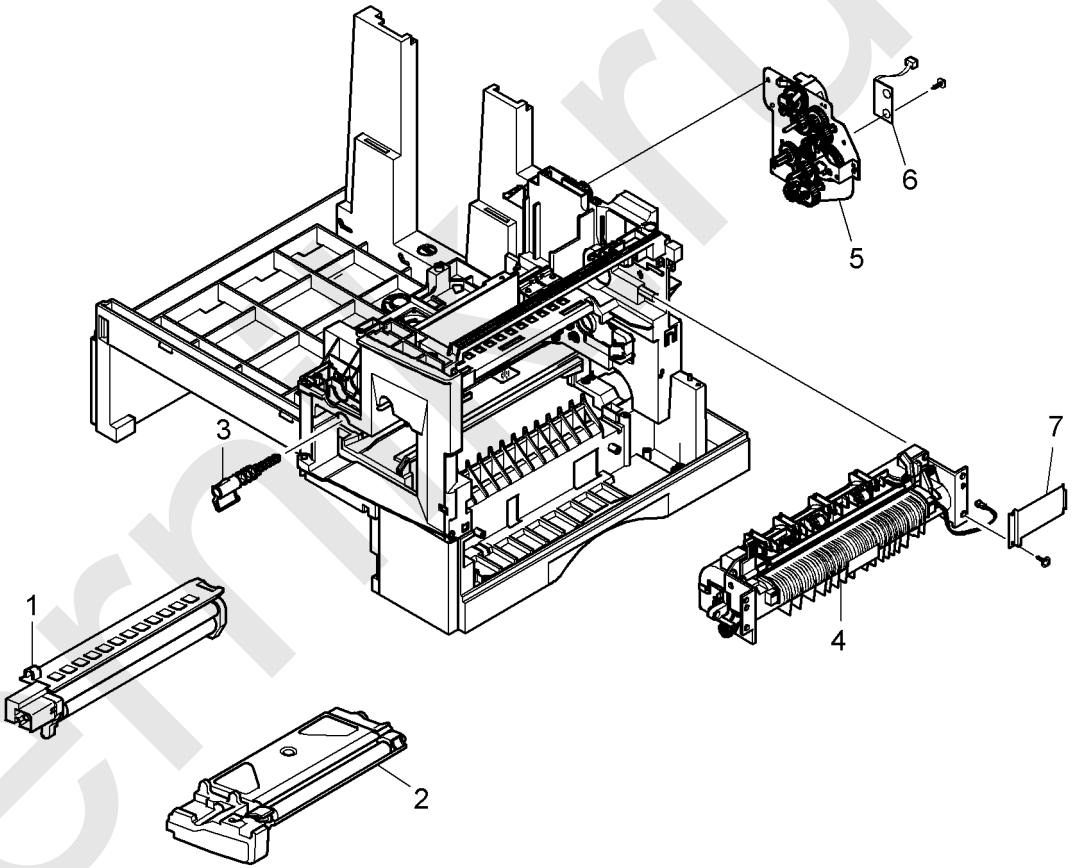

AP-8-0021-A

laserm.ru

PL 10.10 Exit Assembly

Item	Part	Description
1	600N01736	MEC - Exit Assembly (REP 10.2)
2	–	PMO - Guide - Exit Upper (P/O PL 10.10 Item 1)
3	–	PMO - Guide - Exit Lower (P/O PL 10.10 Item 1)
4	–	PMO - Guide - Jam Remove (P/O PL 10.10 Item 1)
5	007N01115	MEC - Roller Exit Drive
6	022N01474	PMO - Roller Decurl
7	020N00768	PMO - Pulley Duplex
8	023N01051	Belt - Timing Gear
9	007N01261	Gear - Duplex
10	013N00514	PMO - Bearing Large DP
11	–	IPR - Ground - Exit (P/O PL 10.10 Item 1)
12	–	ICT - Shaft - Exit Lower ID (P/O PL 10.10 Item 1)
13	–	PMO - Roller Exit (P/O PL 10.10 Item 1)
14	–	Spring - Exit Roll FD (P/O PL 10.10 Item 1)
15	–	PMO - Holder Exit Roll (P/O PL 10.10 Item 1)
16	–	PMO - Roller FD F (P/O PL 10.10 Item 1)
17	–	PMO - Roller FD R (P/O PL 10.10 Item 1)
18	–	Spring - Exit Lower Idle (P/O PL 10.10 Item 1)
19	115N00354	MEC - Brush Antistatic
20	–	PBA SUB - Bin Full Sensor (P/O PL 10.10 Item 1)
21	–	Actuator SUB - Bin Full Sensor (P/O PL 10.10 Item 1)
22	–	E - Clip (REF: PL 31.10 Item 6)

NOTE: *If necessary, refer to GP 20 for the acronym list and cross reference lists of more commonly recognised part names.*

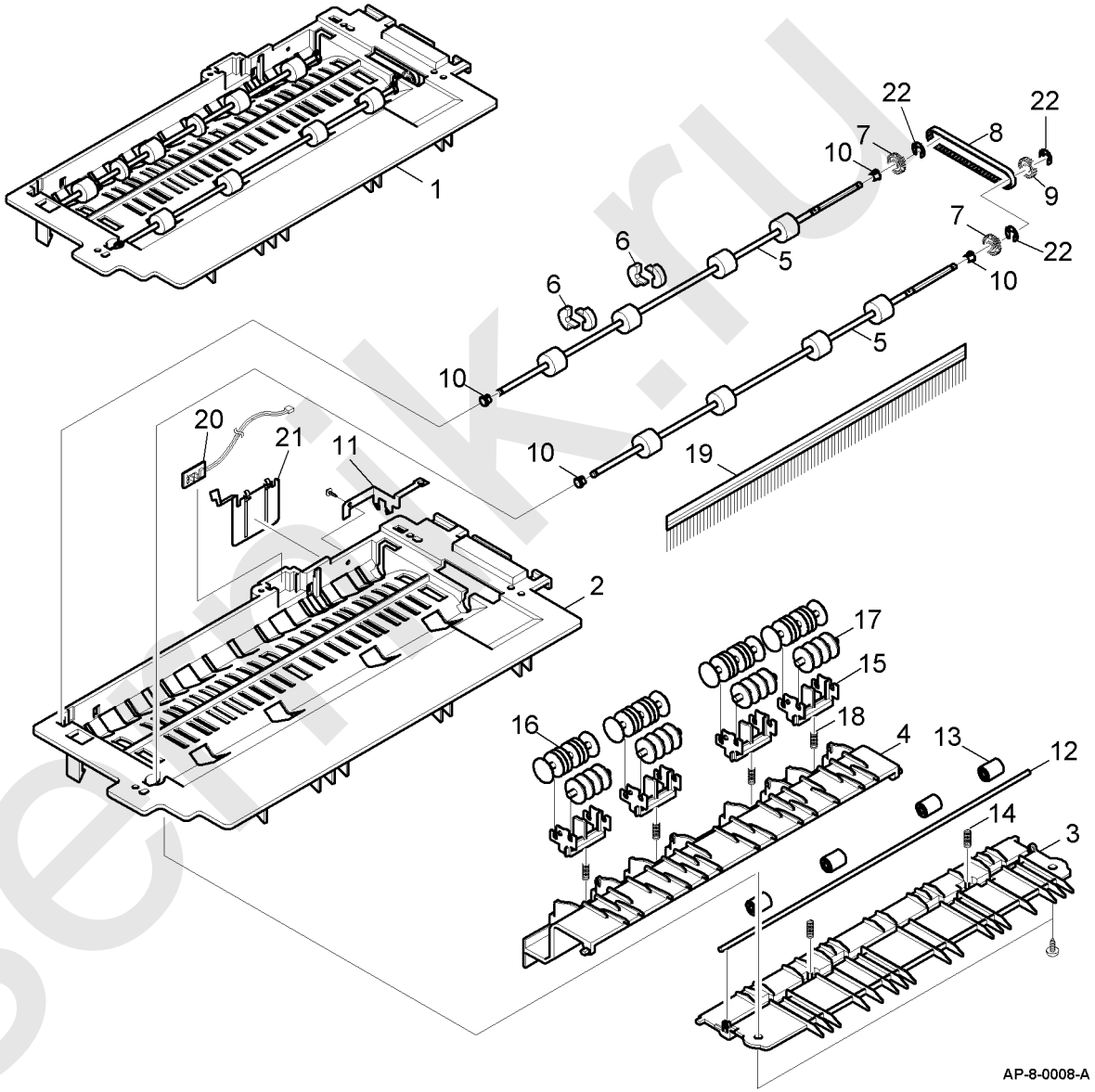

laserpik.ru

PL 14.10 ELA HOU Scanner Assembly (1 of 2)

Item	Part	Description
1	002N02274	ELA HOU - Scanner Assembly (C20, M20) (REP 14.1)
–	002N02273	ELA HOU - Scanner Assembly (M20i) (REP 14.1)
2	002N02284	ELA HOU SCAN Upper Assembly (REP 14.1)
3	019N00797	A/S Material Dummy Upper Assembly (REP 14.1)
4	–	MCT Glass DADF (P/O PL 14.10 Item 3)
5	–	Label (L) Registration Edge (L) (P/O PL 14.10 Item 3)
6	–	PMO Dummy Upper (P/O PL 14.10 Item 3)
7	–	Sheet Dummy Upper (P/O PL 14.10 Item 3)
8	–	PPR Registration Edge (F) (P/O PL 14.10 Item 2)
9	–	PMO Cover Scan Upper (P/O PL 14.10 Item 2)
10	–	IPR Holder Glass (P/O PL 14.10 Item 2)
11	–	Label (P) Sheet Shading (P/O PL 14.10 Item 2)
12	–	MCT Glass Scanner (Legal) (P/O PL 14.10 Item 2)

NOTE: *If necessary, refer to GP 20 for the acronym list and cross reference lists of more commonly recognised part names.*

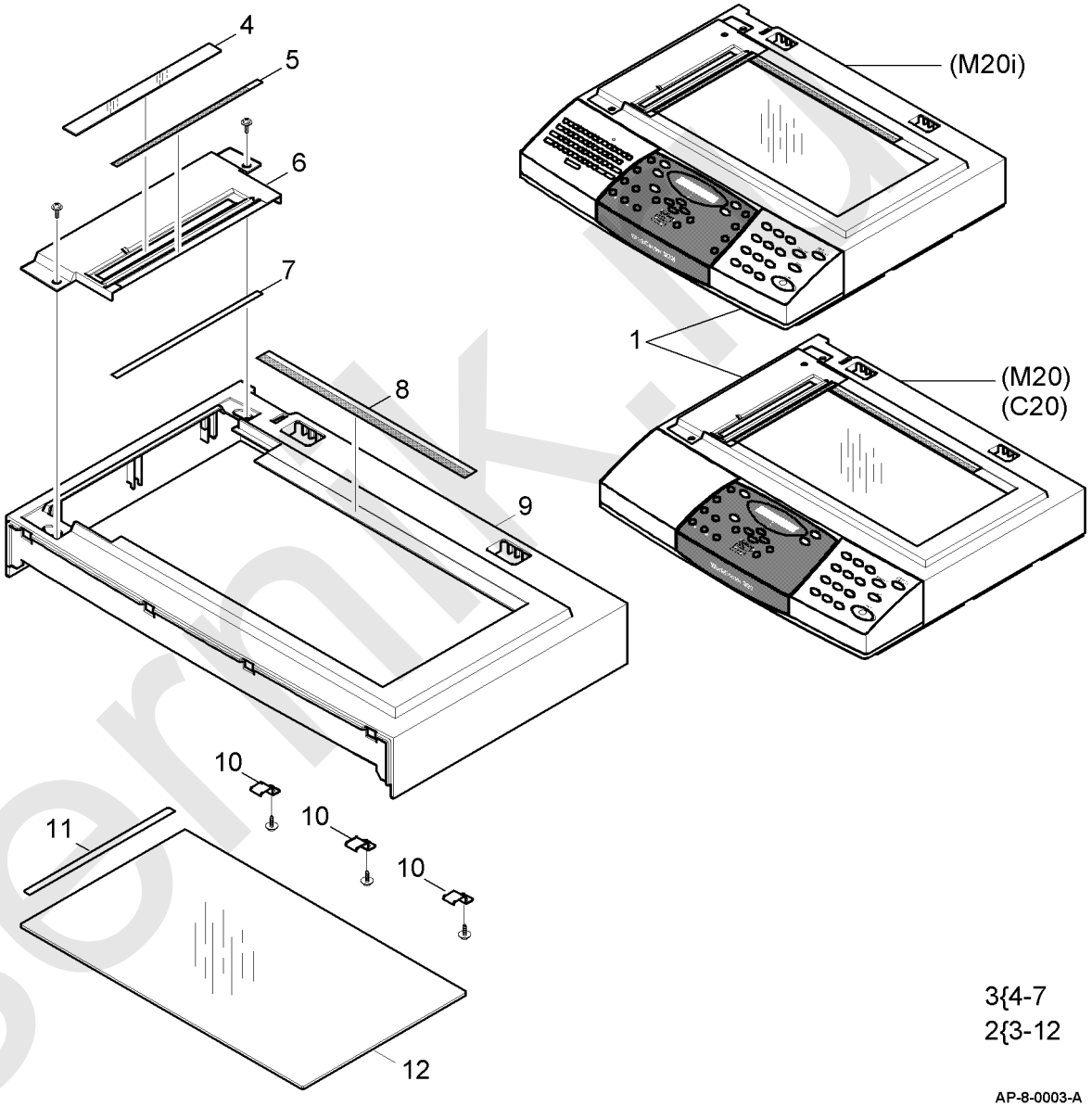

laserpik.ru

PL 14.11 ELA HOU Scanner Assembly (2 of 2)

Item	Part	Description
1	–	Shaft CCD (UMAX) (Not Spared) (REP 14.1)
2	023N00954	Belt - Timing Gear (REP 14.1)
3	023N00955	Spring ETC - Belt
4	–	Ring - E (REF: PL 31.10 Item 6)
5	140N62872	PBA SUB - D SUB (REP 14.1)
6	–	PMO Pulley (Not Spared)
7	–	Washer Plain (Not Spared)
8	–	ICT - Insert Shaft (Not Spared)
9	–	CBF Harness- Driver GND (Not Spared)
10	–	Not Used (Not Spared)
11	140N05936	IPR - BRK Scan BD
12	011N00473	PMO Lever Sensor
13	–	Spring ETC - Exit (Not Spared)
14	152N11552	CBF Harness - Scan Motor
15	–	Cover M CCD Cable (Not Spared) (REP 14.1)
16	002N02166	ELA HOU - CCD Module (REP 14.1)
17	117N01605	CBF Signal - CCD FFC (P/O PL 14.11 Item 31) (REP 14.1)
18	152N11553	CBF Harness - OPE
19	–	PMO - Cover Dummy Lower (Not Spared) (REP 14.1)
20	–	Holder M CCD (UMAX) (Not Spared)
21	–	IPR - Channel Base Frame (Not Spared) (REP 14.1)
22	–	Cover - Scan Lower (UMAX) (Not Spared)
23	002N02290	ELA HOU - Scan Motor (REP 14.1)
24	–	Bracket - Motor - Platen (P/O PL 14.11 Item 23)
25	–	Motor Step - Scan (P/O PL 14.11 Item 23)
26	–	Gear Idle (P/O PL 14.11 Item 23)
27	–	PMO - Holder Belt (P/O PL 14.11 Item 23)
28	–	Gear - Timing (P/O PL 14.11 Item 23)
29	–	Ring - E (REF: PL 31.10 Item 6)
30	–	Gear Reduction 73/37 (P/O PL 14.11 Item 23)
31	–	ELA HOU - Scan Lower (P/O PL 14.10 Item 1)

NOTE: *If necessary, refer to GP 20 for the acronym list and cross reference lists of more commonly recognised part names.*

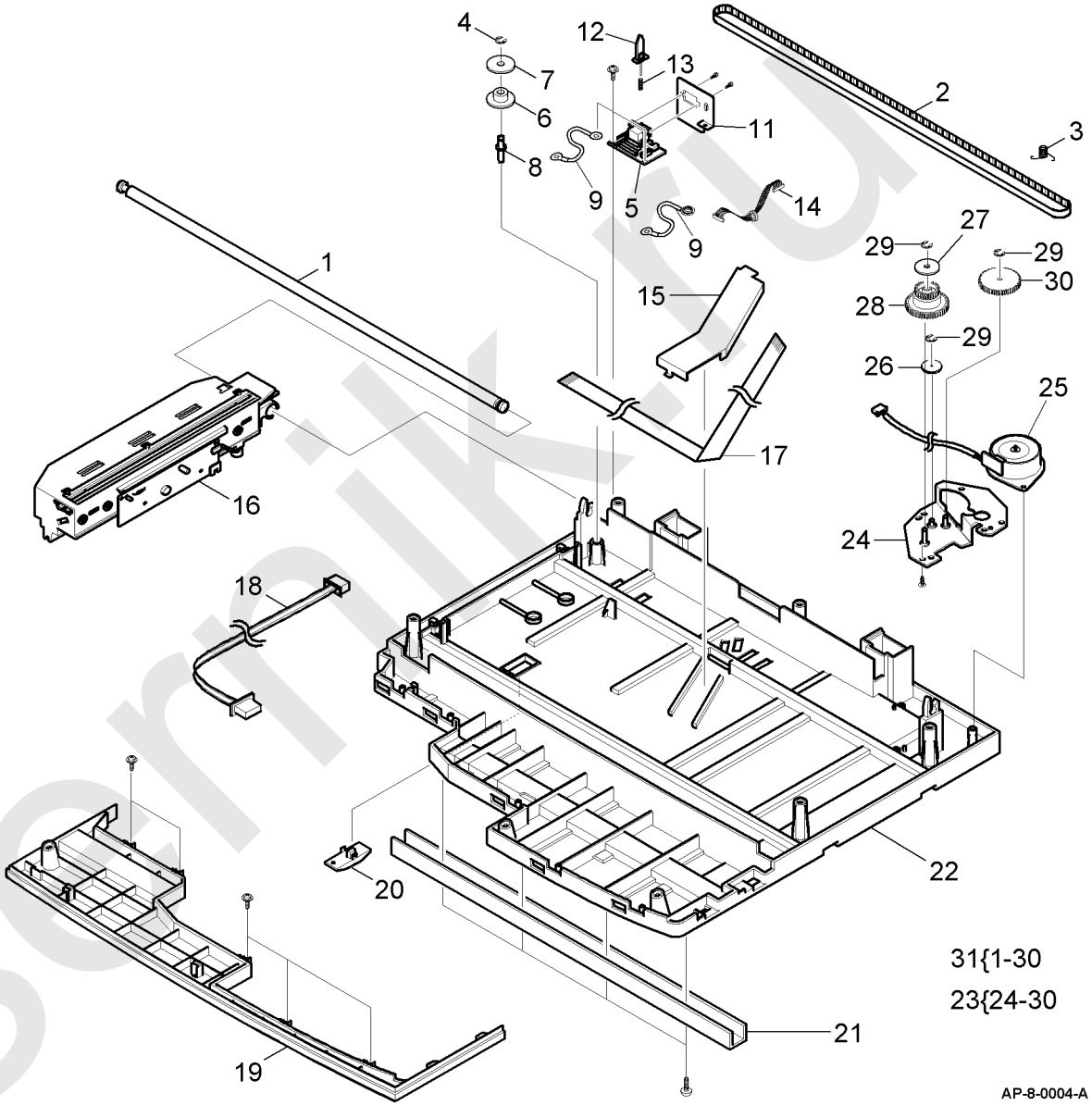

lasermik.ru

PL 31.10 Maintenance/Installation/ Removal Kits

Item	Part	Description
1	–	Foreign Interface Device Kit (see NOTE 2)
2	497N00184	Network Accessory Kit
3	498N00364	2nd Paper Tray
4	098N01724	Stand
5	–	Repackaging Kit (see NOTE 2)
6	–	Common Hardware Kit (see NOTE 2)

NOTE: *1. If necessary, refer to GP 20 for the acronym list and cross reference lists of more commonly recognised part names.*

NOTE: *2. Part number unavailable at time of publication.*

NO EXPLODED VIEW PROVIDED

AP-8-0027-A

laserrnik.ru

Part Number Index

Table 1 Part Number Index

Part Number	Part List
001N00384	PL 4.25
001N00451	PL 4.25
002N02009	PL 4.25
002N02017	PL 4.25
002N02107	PL 4.25
002N02161	PL 4.25
002N02166	PL 14.11
002N02273	PL 14.10
002N02274	PL 14.10
002N02275	PL 5.10
002N02276	PL 8.25
002N02277	PL 9.10
002N02278	PL 9.10
002N02279	PL 4.15
002N02280	PL 4.25
002N02281	PL 2.10
002N02282	PL 2.11
002N02283	PL 2.10
002N02284	PL 14.10
002N02285	PL 5.14
002N02286	PL 5.10
002N02287	PL 5.10
002N02288	PL 5.10
002N02289	PL 4.20
002N02290	PL 14.11
002N02291	PL 5.10
003N00939	PL 5.14
006N01184	PL 7.16
006N01241	PL 5.14
007N01114	PL 8.10
007N01115	PL 10.10
007N01118	PL 9.10
007N01193	PL 8.25
007N01261	PL 10.10
009N01363	PL 8.10
009N01364	PL 8.20
009N01365	PL 8.20
009N01410	PL 7.16
009N01465	PL 7.10

Table 1 Part Number Index

Part Number	Part List
009N01466	PL 7.10
009N01467	PL 4.10
011N00463	PL 4.15
011N00464	PL 4.25
011N00465	PL 4.25
011N00473	PL 14.11
013N00514	PL 10.10
013N00515	PL 8.20
013N00516	PL 8.20
015N00440	PL 4.10
015N00441	PL 4.10
015N00486	PL 7.16
017N00212	PL 4.10
018N00193	PL 2.11
018N00194	PL 2.11
019N00612	PL 8.20
019N00613	PL 8.20
019N00795	PL 5.13
019N00796	PL 8.20
020N00768	PL 10.10
019N00797	PL 14.10
022N01470	PL 8.15
022N01474	PL 10.10
022N01475	PL 8.10
022N01479	PL 8.20
022N01483	PL 8.20
022N01486	PL 4.10
022N01511	PL 5.14
022N01600	PL 8.25
	PL 7.15
022N02056	PL 8.15
022N02057	PL 8.10
023N00954	PL 14.11
023N00955	PL 14.11
023N01051	PL 10.10
025N00081	PL 5.14
029N00345	PL 2.11
029N00346	PL 2.11
029N00347	PL 2.11
029N00348	PL 2.11
029N00349	PL 2.11

laserpik.ru

Table 1 Part Number Index

Part Number	Part List
029N00350	PL 2.11
029N00351	PL 2.11
029N00352	PL 2.11
029N00353	PL 2.11
029N00354	PL 2.11
029N00355	PL 2.11
029N00356	PL 2.11
030N00606	PL 4.10
038N00371	PL 4.25
050N00392	PL 4.25
050N00441	PL 7.10
050N00442	PL 7.10
050N00443	PL 5.10
050N00445	PL 8.11
091N00699	PL 4.25
091N80193	PL 2.10
091N80194	PL 2.10
091N80195	PL 2.10
091N80196	PL 2.10
091N80197	PL 2.10
091N80198	PL 2.10
091N80199	PL 2.10
091N80200	PL 2.10
091N80201	PL 2.10
091N80202	PL 2.10
091N80203	PL 2.10
091N80204	PL 7.10
091N80205	PL 7.10
098N01724	PL 31.10
106R01047	PL 9.10
106R01048	PL 9.10
110N01041	PL 4.15
113N00364	PL 4.15
113N00365	PL 4.15
113R00671	PL 9.10
115N00354	PL 10.10
117N01313	PL 1.10
117N01602	PL 1.10
117N01605	PL 14.11
117N01620	PL 1.10
120N00392	PL 8.20

Table 1 Part Number Index

Part Number	Part List
120N00393	PL 8.25
	PL 7.15
120N00438	PL 5.10
122N00234	PL 6.10
127N01375	PL 4.20
127N07298	PL 4.20
127N07299	PL 4.20
127N07300	PL 4.10
130N01201	PL 5.14
130N01203	PL 8.20
130N01204	PL 8.25
130N01205	PL 4.15
130N01206	PL 8.20
130N01207	PL 8.25
130N01208	PL 4.15
130N01213	PL 4.10
130N01337	PL 8.25
	PL 7.15
130N01338	PL 8.20
140N05936	PL 14.11
140N05940	PL 8.25
140N62859	PL 1.10
140N62860	PL 1.10
140N62861	PL 1.10
140N62862	PL 1.10
140N62863	PL 1.10
140N62864	PL 1.10
140N62865	PL 2.11
140N62866	PL 2.11
140N62867	PL 5.10
140N62868	PL 5.14
140N62869	PL 5.10
140N62870	PL 4.10
140N62871	PL 1.10
140N62872	PL 14.11
140N62873	PL 4.15
140N62874	PL 7.16
140N62875	PL 1.10
140N62876	PL 1.10
140N62877	PL 1.10
140N62878	PL 1.10

laserrik.ru

Table 1 Part Number Index

Part Number	Part List
140N62879	PL 1.10
144N00128	PL 1.10
144N00129	PL 1.10
152N01991	PL 4.10
152N01992	PL 7.16
152N11548	PL 1.10
152N11549	PL 6.10
152N11550	PL 1.10
152N11551	PL 1.10
152N11552	PL 14.11
152N11553	PL 14.11
152N11554	PL 4.20
152N11555	PL 4.20
152N11556	PL 4.15
152N11557	PL 1.10
498N00184	PL 31.10
498N00364	PL 31.10
600N01736	PL 10.10
600N01741	PL 8.20
700N00096	PL 2.10
700N00097	PL 2.10

laserrnik.ru